中華電力有限公司
CLP Power Hong Kong Limited

資產管理部
Asset Management Department

香港九龍深水涉福華街 215 號六樓
6/F Shamshuipo Centre, 215 Fuk Wa Street
Kowloon, Hong Kong

電話 Tel (852) 2678 6222
傳真 Fax (852) 2678 6369
網址 Website www.clpgroup.com

02 December 2019

To: To Whom It May Concern

Our Ref L/0011/2019-09/AMD-AD

Dear Sirs/Madams,

Code of Practice 101 for Distribution Substation Design (COP101)
Update No. 4/2019 – New and Revised COP101 Drawings

This letter serves to announce the new and revision of COP101 drawings as below. We are pleased to provide herewith updates to the Code of Practice 101 for Distribution Substation Design (COP101) for your reference.

Document:	COP101 Version 14
Effective Date:	10 December 2019
Summary of Change:	New and revised COP101 drawings are listed below and attached. 1. Revision of drawing - T-COP-10250-D-E33-0102-03-E-A (Concrete wall or steel supporting structure added to optimise cable routing.) 2. Revision of drawing - T-COP-10250-D-E33-0102-04-E-A (Concrete wall or steel supporting structure added to optimise cable routing.)) 3. Revision of drawing - T-COP-10250-D-E33-0103-16-E-A (Dimension of wicket door added.) 4. Revision of drawing - T-COP-10250-D-E33-0103-17-E-A (Dimension of wicket door added.) 5. Revision of drawing - T-COP-10250-D-E33-0103-18-E-A (Dimension of wicket door added.) 6. Revision of drawing - T-COP-10250-D-E33-0103-19-E-A (Dimension of wicket door added.) 7. Revision of drawing – T-COP-10250-D-E33-0103-29-B-A (Outlet of temporary supply cables updated.) 8. New drawing – T-COP-10250-D-E33-0103-40-A (Typical details of eyebolt Installation for L.V. board)

	9. New drawing – T-COP-10250-D-E33-0103-41-A (Typical details of double leaf laminated steel door with shut bolt) 10. New drawing – T-COP-10250-D-E33-0103-42-A (Typical details of single leaf laminated steel door with shut bolt) 11. Revision of drawing – T-COP-10250-D-E33-0104-04-C-A (Note added.) 12. Revision of drawing – T-COP-10250-D-E33-0104-05-E-A (Note added.) 13. Revision of drawing – T-COP-10250-D-E33-0104-06-F-A (Note added.) 14. Revision of drawing – T-COP-10250-D-E33-0104-07-G-A (Note added.) 15. Revision of drawing – T-COP-10250-D-E33-0112-03-A-A (Vertical storage frame arrangement for 2700 length floodgate is deleted.)

Yours sincerely,

Yiksing Yeung
Acting Asset Development Engineer

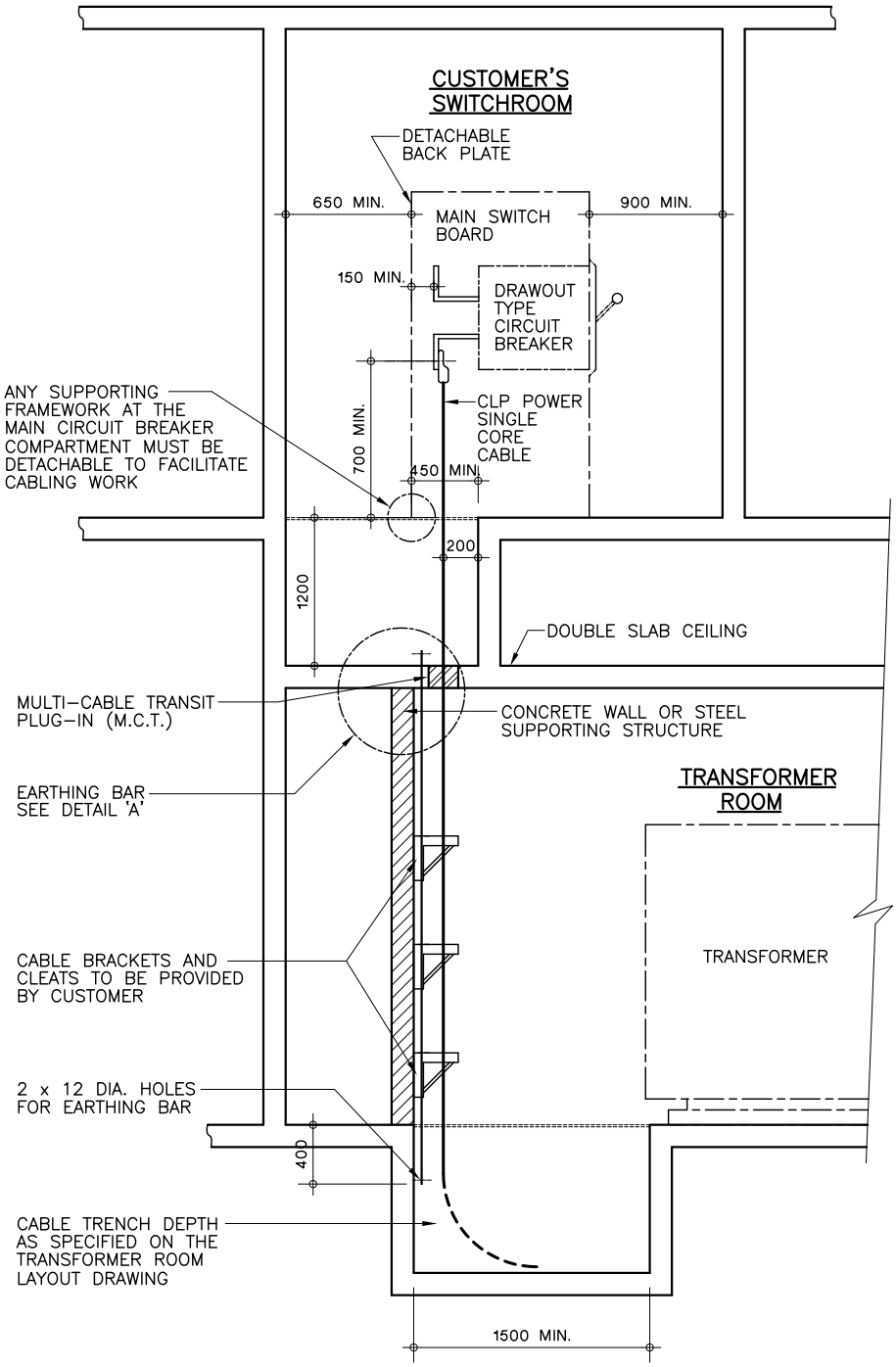

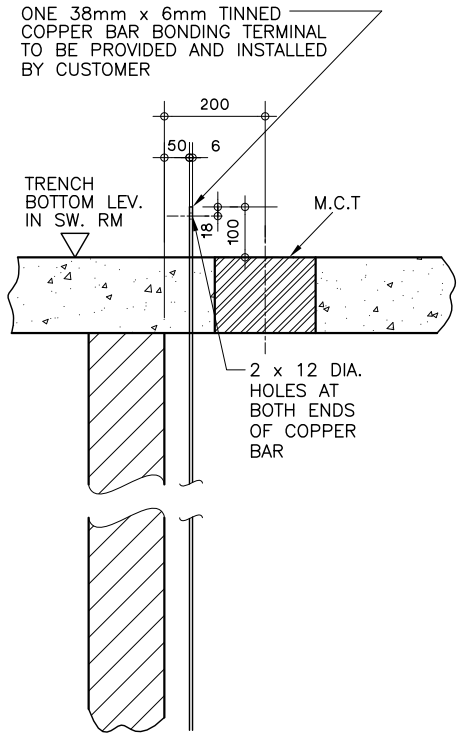

DETAIL 'A'
SCALE 1 : 15

1. EXACT POSITION OF ALL MAIN INCOMING CIRCUIT BREAKERS AND DETAILED CABLE TRENCH LAYOUT WITHIN CUSTOMER'S SWITCHROOM MUST BE SUBMITTED TO CLP POWER FOR APPROVAL PRIOR TO INSTALLATION.
2. REFER TO DRAWING NO. T-COP-10250-D-E33-0103-13 FOR THE CLEARANCE BEHIND THE MAIN SWITCH BOARD.
3. WATERROOFING SHALL BE APPLIED TO THE SLAB BETWEEN THE CEILING OF THE SUBSTATION AND THE VOID.
4 DRAIN SHALL BE PROVIDED IN THE VOID TO DRAIN AWAY WATER LEAKED INTO THE VOID.
5. NO DRAIN OR OTHER WATER SERVICES PIPE SHALL RUN INTO OR CONCEAL IN THE CEILING SLAB OF THE SUBSTATION.

E	CONCRETE WALL OR STEEL SUPPORTING STRUCTURE ADDED TO OPTIMISE CABLE ROUTING
D	CABLE TRENCH AND FACILITY FOR CUSTOMER MAIN SWITCHROOM UPDATED
C	DIMENSION OF CABLE TRENCH ADDED AND DOUBLE SLAB HEIGHT CHANGED
B	DOUBLE SLAB CEILING ADDED
A	NOTE 2 ADDED

CLP 中電

REVS.	21.11.07	08.01.10	23.03.12	23.02.17	20.06.19						
	A	B	C	D	E	F	G	H	J	K	L
INITIAL	K.C.C.	K.C.C.	K.C.C.	H.T.YU	H.T.YU						

DRAWN:	S. C. TO	DATE:	12-8-2002
CHECKED:	K. C. CHENG	APPROVED:	K. W. WONG
SCALE:	1 : 50 (mm)	SHEET(S) IN SET:	

TITLE :

MINIMUM REQUIREMENTS FOR CUSTOMER MAIN SWITCHROOM ABOVE TRANSFORMER ROOM

ASSET MANAGEMENT

DRG. NO. T/COP/10250/D/E33/0102/03/E/A

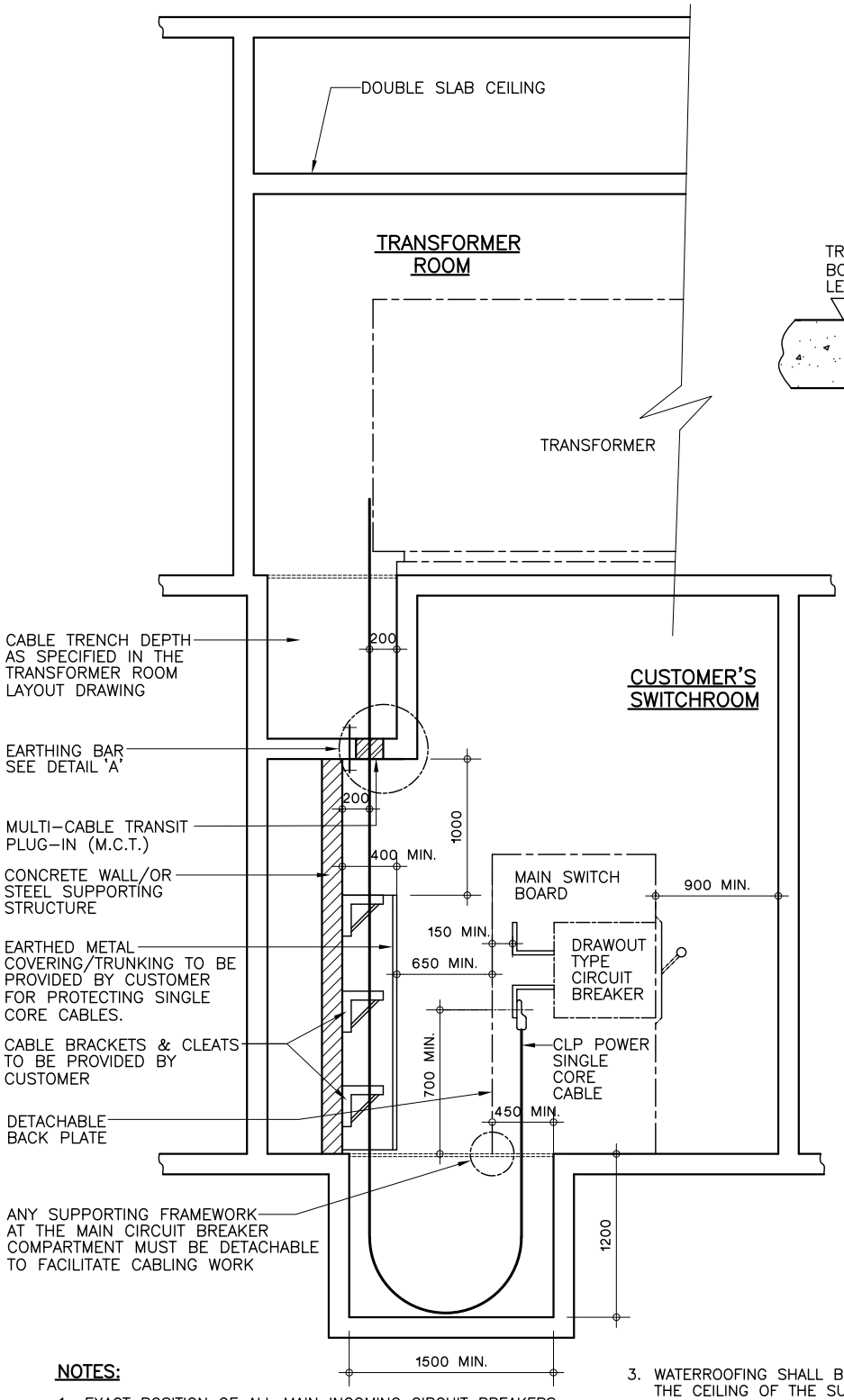

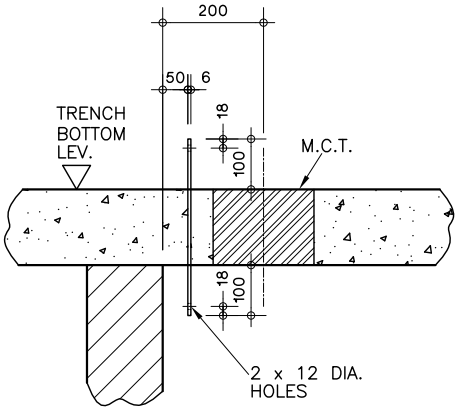

DETAIL 'A'
SCALE 1 : 15

NOTES:

1. EXACT POSITION OF ALL MAIN INCOMING CIRCUIT BREAKERS AND DETAILED CABLE TRENCH LAYOUT WITHIN CUSTOMER'S SWITCHROOM MUST BE SUBMITTED TO CLP POWER FOR APPROVAL PRIOR TO INSTALLATION.
2. REFER TO DRAWING NO. T-COP-10250-D-E33-0103-13 FOR THE CLEARANCE BEHIND THE MAIN SWITCH BOARD.
3. WATERROOFING SHALL BE APPLIED TO THE SLAB BETWEEN THE CEILING OF THE SUBSTATION AND THE VOID.
4. DRAIN SHALL BE PROVIDED IN THE VOID TO DRAIN AWAY WATER LEAKED INTO THE VOID.
5. NO DRAIN OR OTHER WATER SERVICES PIPE SHALL RUN INTO OR CONCEAL IN THE CEILING SLAB OF THE SUBSTATION.

C	DIMENSION OF CABLE TRENCH ADDED AND DOUBLE SLAB HEIGHT CHANGED	D	CABLE TRENCH AND FACILITY FOR CUSTOMER MAIN SWITCHROOM UPDATED.	E	CONCRETE WALL OR STEEL SUPPORTING STRUCTURE ADDED TO OPTIMISE CABLE ROUTING

REVS.	21.11.07	08.01.10	23.03.12	17.03.17	20.09.19						
	A	B	C	D	E	F	G	H	J	K	L
INITIAL	K.C.C.	K.C.C.	K.C.C.	H.T.YU	H.T.YU						

CLP 中電

DRAWN:	T. Y. IP	DATE:	19-07-2002
CHECKED:	K. C. CHENG	APPROVED:	K. W. WONG
SCALE:	1 : 50 (mm)	SHEET(S) IN SET:	

TITLE :

MINIMUM REQUIREMENTS FOR CUSTOMER MAIN SWITCHROOM BELOW TRANSFORMER ROOM

ASSET MANAGEMENT

DRG. NO. T/COP/10250/D/E33/0102/04/E/A

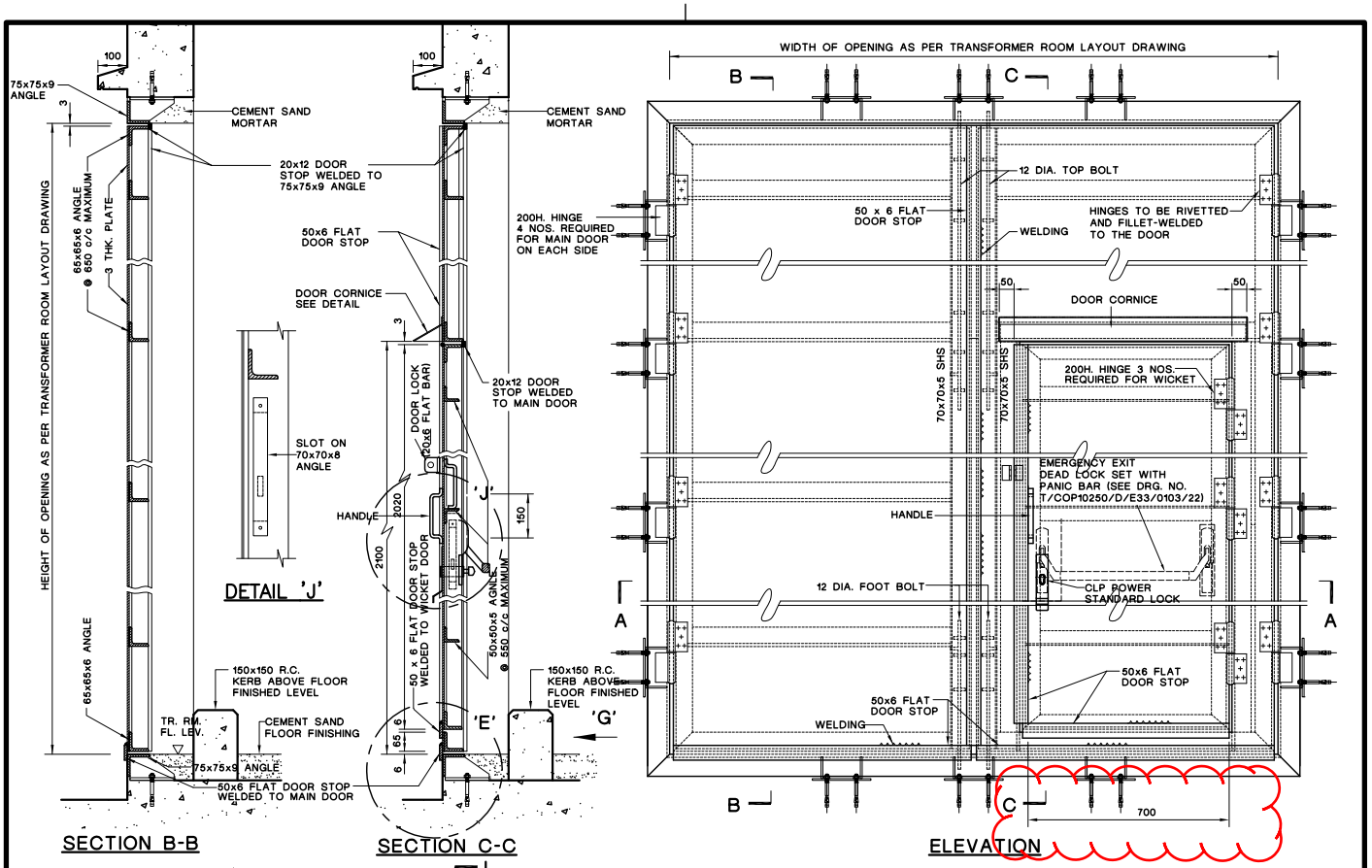

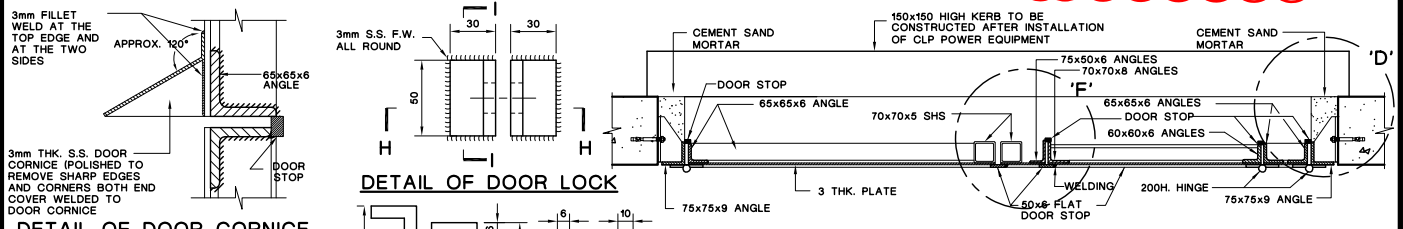

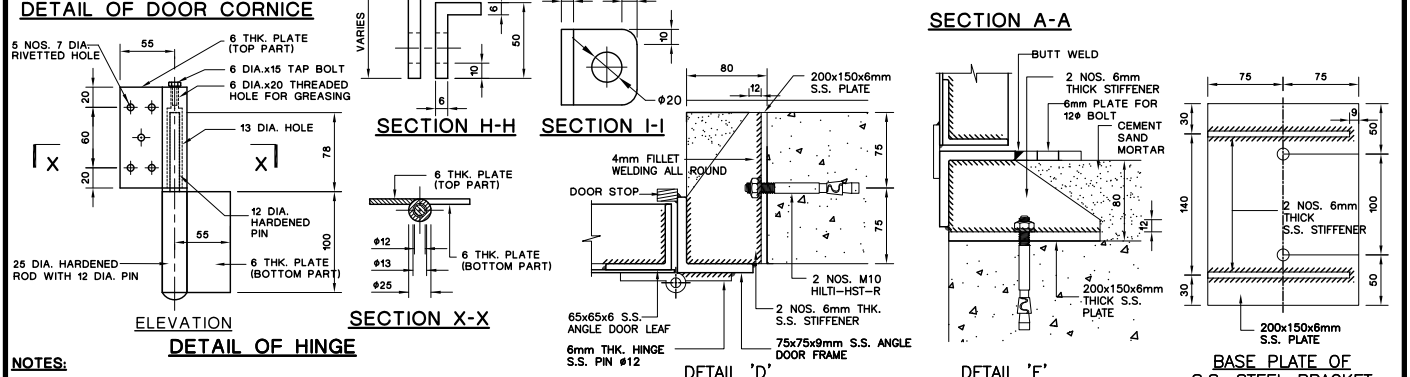

TYPICAL STEEL BRACKET FIXING DETAIL

NOTE: SPACING OF STEEL BRACKET TO BE 450 c/c OR IN ACCORDING WITH THE STRUCTURAL DESIGN.

NOTES:

1. ALL CONNECTIONS FOR STAINLESS STEEL WORKS SHALL BE 3mm S.S. FILLET WELD ALL ROUND, EXCEPT 3mm INTERMITTENT FILLET WELD 30@300 C/C FOR FIXING OF 3mm THICK STAINLESS STEEL PLATE.
2. ALL STEEL WORKS TO BE GRADE 316L STAINLESS STEEL OR EQUIVALENT.
3. ALL STEEL WORKS MUST BE BONDED TO THE EARTHING TERMINAL AT THE DISTRIBUTION BOARD WITH COPPER CONDUCTOR NOT LESS THAN 6mm².
4. ALL DIMENSIONS ARE IN mm.
5. ALL DIMENSIONS, CONSTRUCTION DETAILS AND MEMBER SIZES SHOWN ARE INDICATIVE ONLY. THE DEVELOPER/CONTRACTOR IS RESPONSIBLE TO DESIGN FIRE RATED DOOR WITH DUE CONSIDERATION OF THE STRUCTURAL AND FIRE PERFORMANCE REQUIREMENTS UNDER RELATED REGULATIONS AND ENSURE THAT THE REQUIRED FIRE RESISTANCE RATING CAN BE ACHIEVED WITH FIRE CERTIFICATE AVAILABLE FOR CLPP APPROVAL.
6. THE DEVELOPER/CONTRACTOR IS REPONSIBLE TO CHECK WITH A STRUCTURAL SUBMISSION FOR THE STEEL DOOR AND BRACKETS. PARTICULARLY TO CATER FOR THE DESIGN WIND PRESSURE TO MATCH THE BUILDING HEIGHT. THE DESIGN WIND LOAD SHALL COMPLY WITH CLAUSE 6 OF CODE OF PRACTICE ON WIND EFFECTS HONG KONG 2004.

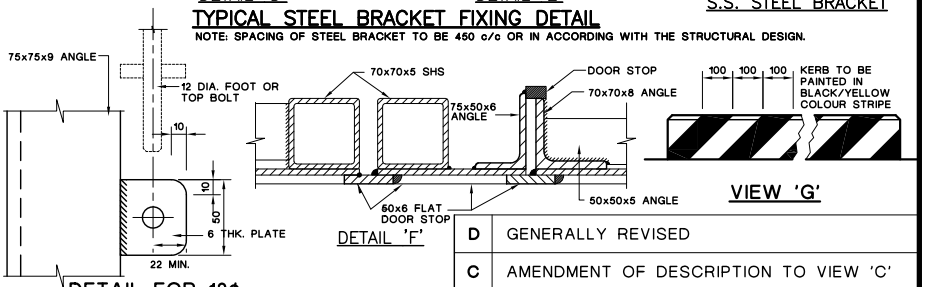

D	GENERALLY REVISED
C	AMENDMENT OF DESCRIPTION TO VIEW 'C'
E	DIMENSION ADDED

REVS.	A	B	C	D	E	F	G	H	J	K	L
	13-9-04	10-8-09	18-03-14	01.06.17	25.06.19						
INITIAL	K.C.C.	K.C.C.	H.T.YU	M.S.FONG	H.T.YU						

CLP 中電

DRAWN:	FONG, MING SUM	DATE:	01-03-2016
CHECKED:	FONG, MING SUM	APPROVED:	GARY KWOK
SCALE:	N. T. S.	SHEET(S) IN SET:	

TITLE :

TYPICAL DETAILS OF DOUBLE LEAF STAINLESS STEEL DOOR WITH WICKET ON THE RIGHT

ASSET MANAGEMENT

DRG. NO. T/COP/10250/D/E33/0103/16/E/A

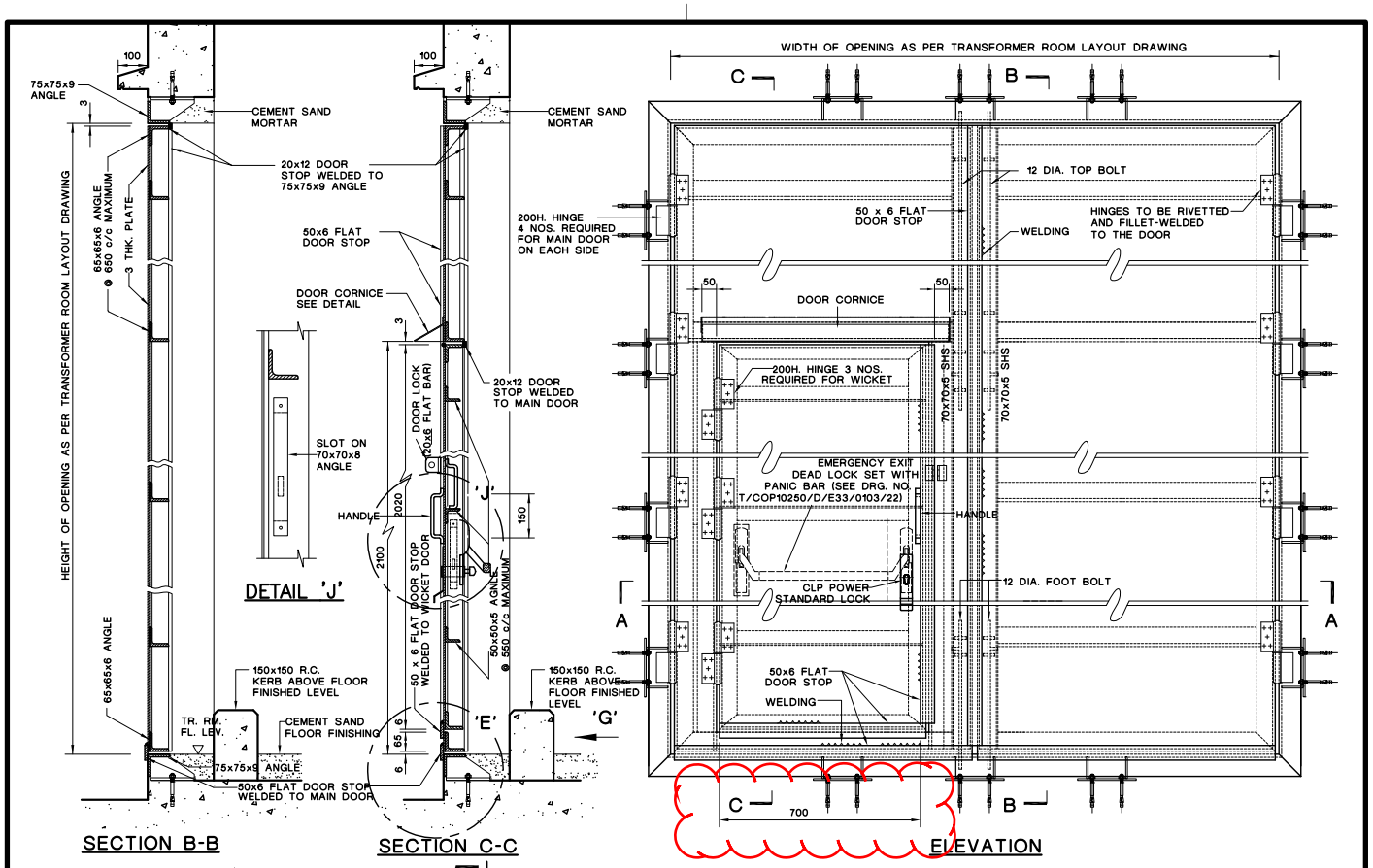

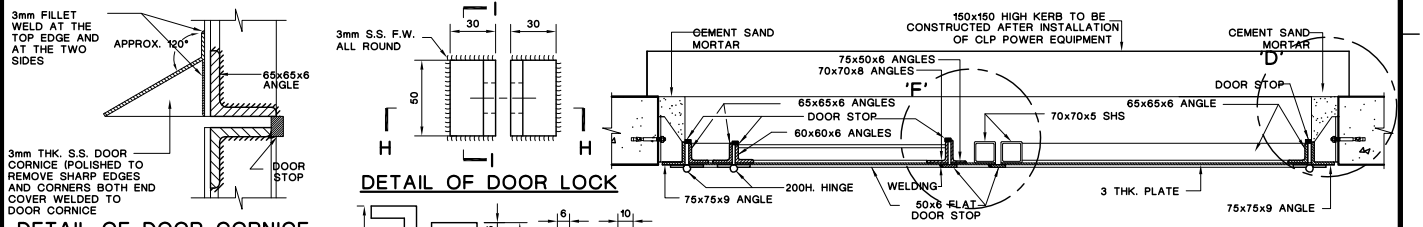

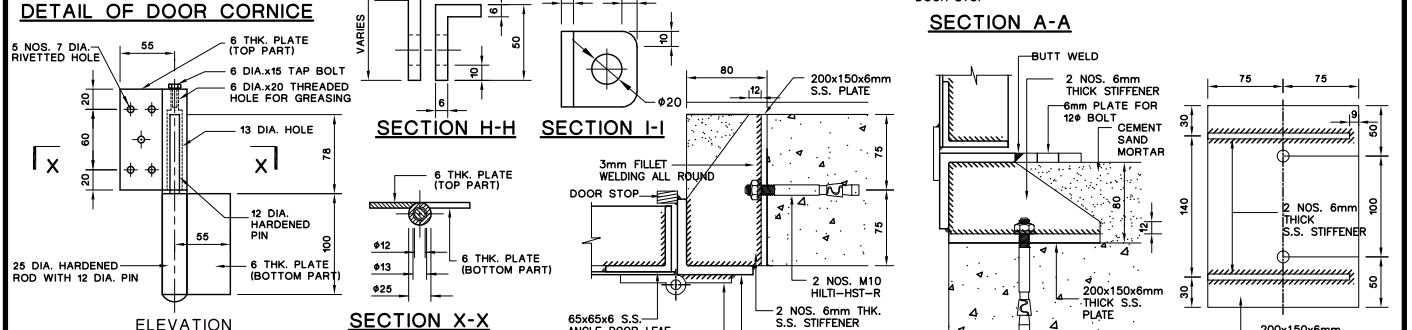

NOTES:

1. ALL CONNECTIONS FOR STAINLESS STEEL WORKS SHALL BE 3mm S.S. FILLET WELD ALL ROUND, EXCEPT 3mm INTERMITTENT FILLET WELD 30@300 C/C FOR FIXING OF 3mm THICK STAINLESS STEEL PLATE.
2. ALL STEEL WORKS TO BE GRADE 316L STAINLESS STEEL OR EQUIVALENT.
3. ALL STEEL WORKS MUST BE BONDED TO THE EARTHING TERMINAL AT THE DISTRIBUTION BOARD WITH COPPER CONDUCTOR NOT LESS THAN 6mm².
4. ALL DIMENSIONS ARE IN mm.
5. ALL DIMENSIONS, CONSTRUCTION DETAILS AND MEMBER SIZES SHOWN ARE INDICATIVE ONLY. THE DEVELOPER/CONTRACTOR IS RESPONSIBLE TO DESIGN FIRE RATED DOOR WITH DUE CONSIDERATION OF THE STRUCTURAL AND FIRE PERFORMANCE REQUIREMENTS UNDER RELATED REGULATIONS AND ENSURE THAT THE REQUIRED FIRE RESISTANCE RATING CAN BE ACHIEVED WITH FIRE CERTIFICATE AVAILABLE FOR CLPP APPROVAL.
6. THE DEVELOPER/CONTRACTOR IS REPONSIBLE TO CHECK WITH A STRUCTURAL SUBMISSION FOR THE STEEL DOOR AND BRACKETS. PARTICULARLY TO CATER FOR THE DESIGN WIND PRESSURE TO MATCH THE BUILDING HEIGHT. THE DESIGN WIND LOAD SHALL COMPLY WITH CLAUSE 6 OF CODE OF PRACTICE ON WIND EFFECTS HONG KONG 2004.

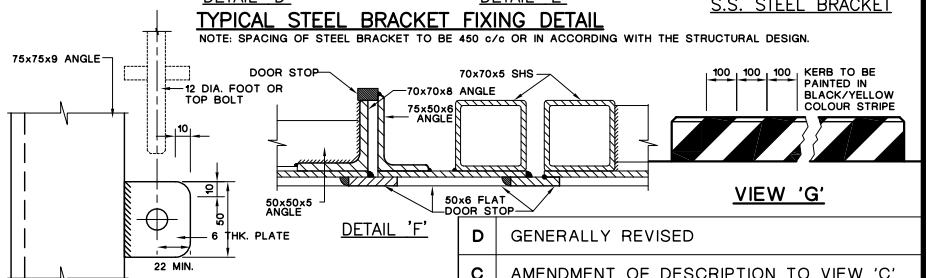

D	GENERALLY REVISED
C	AMENDMENT OF DESCRIPTION TO VIEW 'C'
E	DIMENSION ADDED

REVS.	13-9-04	10-8-09	18-03-14	01-06-17	25-06-19						
	A	B	C	D	E	F	G	H	J	K	L
INITIAL	K.C.C.	K.C.C.	H.T.YU	M.S.FONG	H.T.YU						

CLP 中電

DRAWN:	FONG, MING SUM	DATE:	01-03-2016
CHECKED:	FONG, MING SUM	APPROVED:	GARY KWOK
SCALE:	N. T. S.	SHEET(S) IN SET:	

TITLE :

TYPICAL DETAILS OF DOUBLE LEAF STAINLESS STEEL DOOR WITH WICKET ON THE LEFT

ASSET MANAGEMENT

DRG. NO. T COP 10250 D E33 0103 17 E A

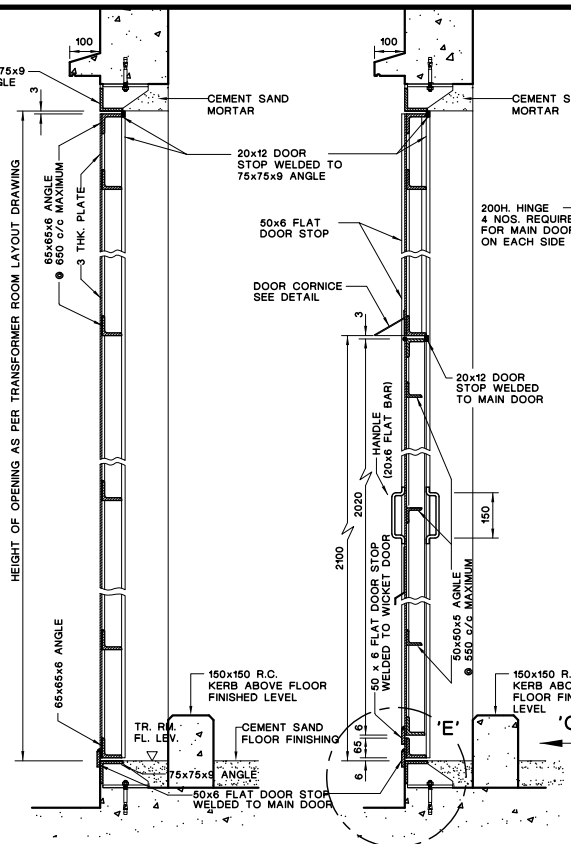

SECTION B-B

SECTION C-C

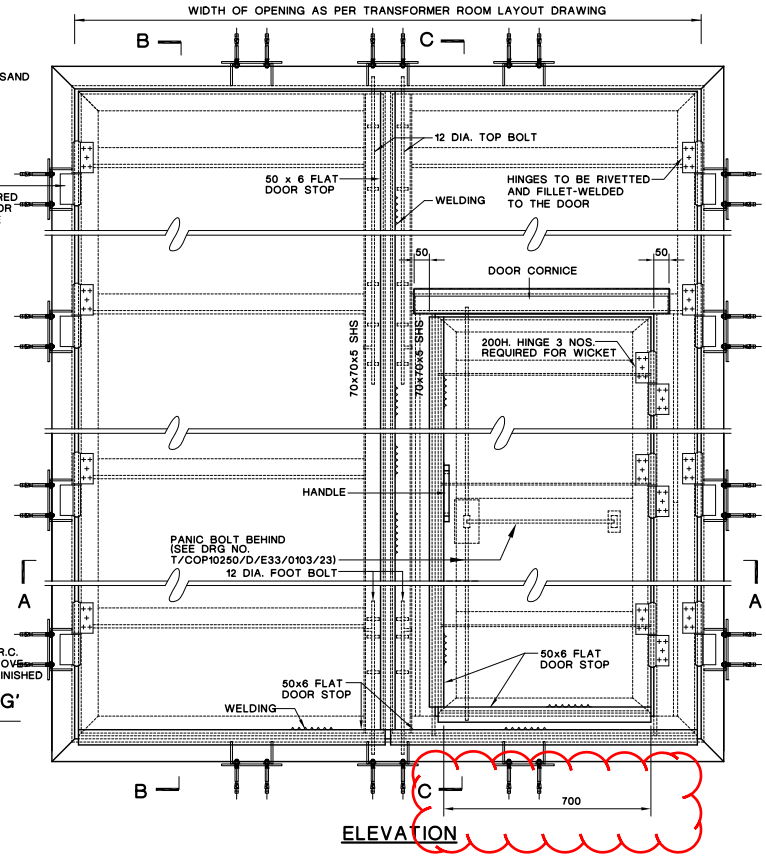

ELEVATION

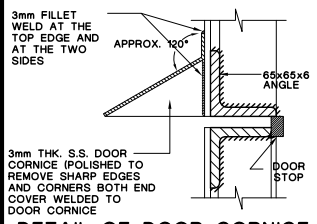

DETAIL OF DOOR CORNICE

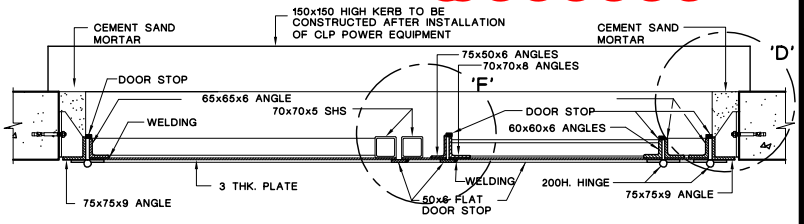

SECTION A-A

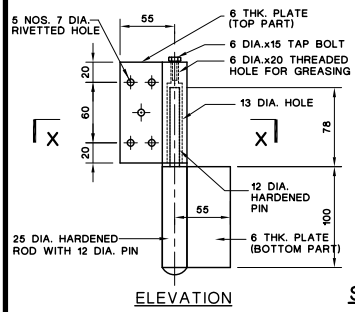

DETAIL OF HINGE

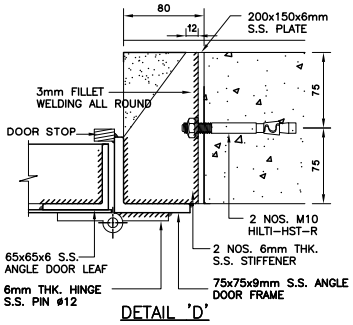

DETAIL 'D'

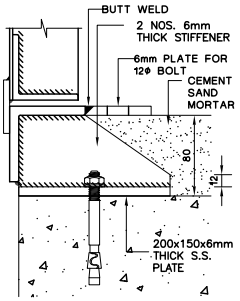

DETAIL 'E'

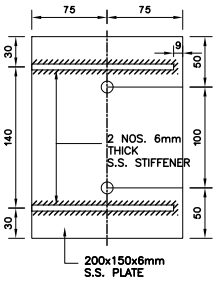

BASE PLATE OF S.S. STEEL BRACKET

TYPICAL STEEL BRACKET FIXING DETAIL

NOTE: SPACING OF STEEL BRACKET TO BE 450 c/c OR IN ACCORDING WITH THE STRUCTURAL DESIGN.

NOTES:

1. ALL CONNECTIONS FOR STAINLESS STEEL WORKS SHALL BE 3mm S.S. FILLET WELD ALL ROUND, EXCEPT 3mm INTERMITTENT FILLET WELD 30@300 C/C FOR FIXING OF 3mm THICK STAINLESS STEEL PLATE.
2. ALL STEEL WORKS TO BE GRADE 316L STAINLESS STEEL OR EQUIVALENT.
3. ALL STEEL WORKS MUST BE BONDED TO THE EARTHING TERMINAL AT THE DISTRIBUTION BOARD WITH COPPER CONDUCTOR NOT LESS THAN 6mm².
4. ALL DIMENSIONS ARE IN mm.
5. ALL DIMENSIONS, CONSTRUCTION DETAILS AND MEMBER SIZES SHOWN ARE INDICATIVE ONLY. THE DEVELOPER/CONTRACTOR IS RESPONSIBLE TO DESIGN FIRE RATED DOOR WITH DUE CONSIDERATION OF THE STRUCTURAL AND FIRE PERFORMANCE REQUIREMENTS UNDER RELATED REGULATIONS AND ENSURE THAT THE REQUIRED FIRE RESISTANCE RATING CAN BE ACHIEVED WITH FIRE CERTIFICATE AVAILABLE FOR CLPP APPROVAL.
6. THE DEVELOPER/CONTRACTOR IS REPONSIBLE TO CHECK WITH A STRUCTURAL SUBMISSION FOR THE STEEL DOOR AND BRACKETS. PARTICULARLY TO CATER FOR THE DESIGN WIND PRESSURE TO MATCH THE BUILDING HEIGHT. THE DESIGN WIND LOAD SHALL COMPLY WITH CLAUSE 6 OF CODE OF PRACTICE ON WIND EFFECTS HONG KONG 2004.

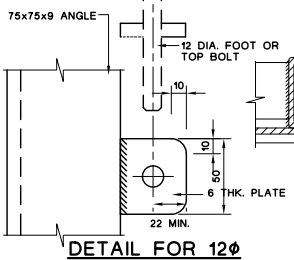

DETAIL FOR 12ø TOP & BOTTOM BOLT

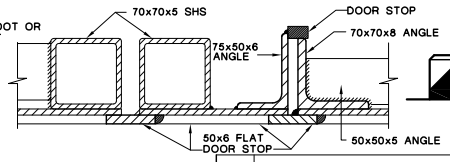

DETAIL 'F'

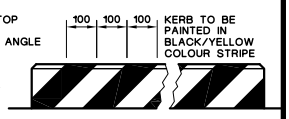

VIEW 'G'

D	GENERALLY REVISED
C	AMENDMENT OF DESCRIPTION TO VIEW 'C'
E	DIMENSION ADDED

REVS.	13-9-04	10-8-09	18-03-14	01-06-17	25-06-19						
	A	B	C	D	E	F	G	H	J	K	L
INITIAL	K.C.C.	K.C.C.	H.T.YU	M.S.FONG	H.T.YU						

CLP 中電

DRAWN:	FONG, MING SUM	DATE:	01-03-2016
CHECKED:	FONG, MING SUM	APPROVED:	GARY KWOK
SCALE:	N. T. S.	SHEET(S) IN SET:	

TITLE :

TYPICAL DETAILS OF DOUBLE LEAF STAINLESS STEEL DOOR WITH WICKET ON THE RIGHT AND WITHOUT LOCK

ASSET MANAGEMENT

DRG. NO. T COP 10250 D E33 0103 18 E A

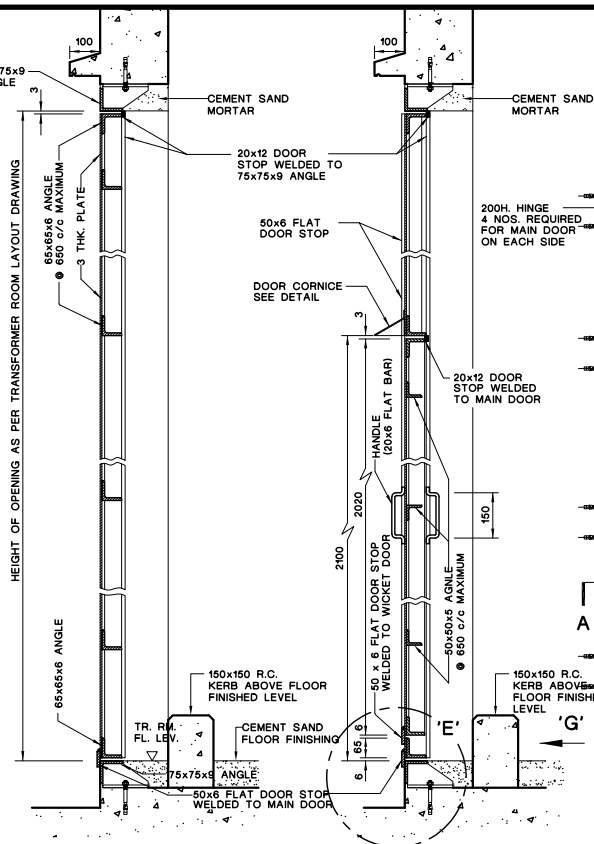

SECTION B-B

SECTION C-C

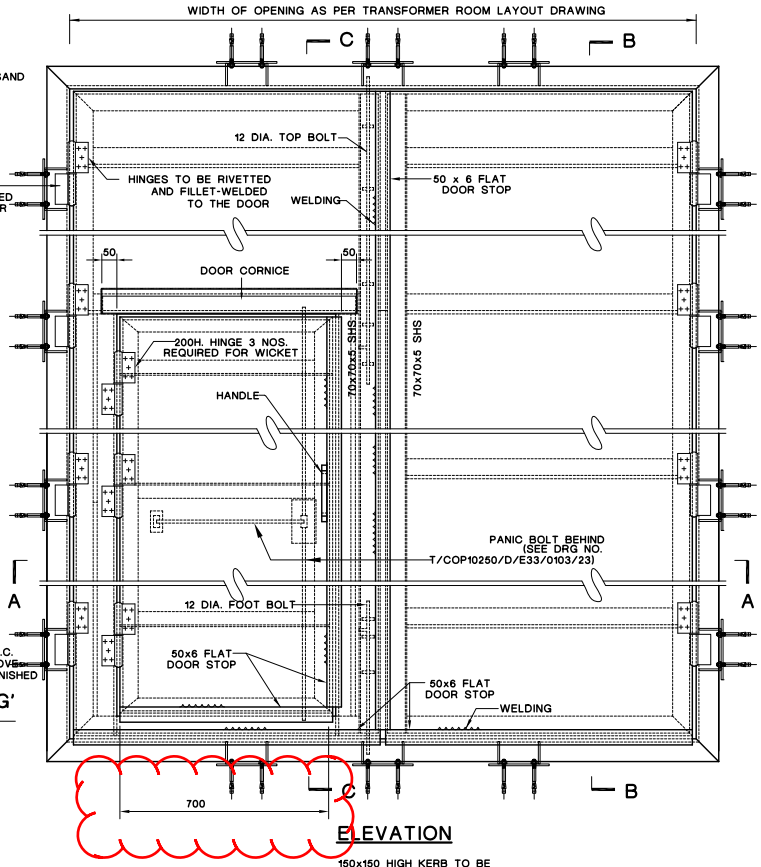

ELEVATION

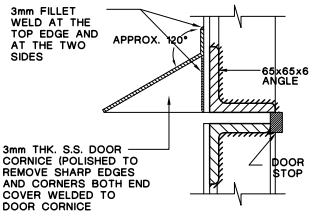

DETAIL OF DOOR CORNICE

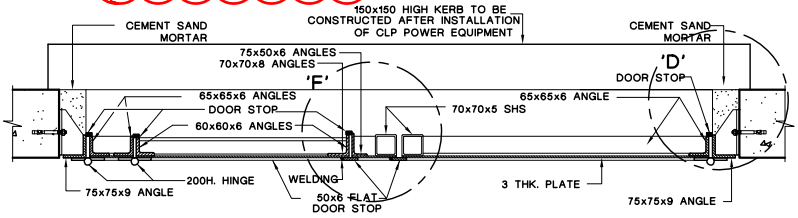

SECTION A-A

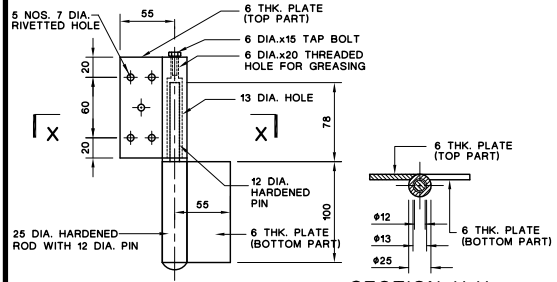

ELEVATION

SECTION X-X

DETAIL OF HINGE

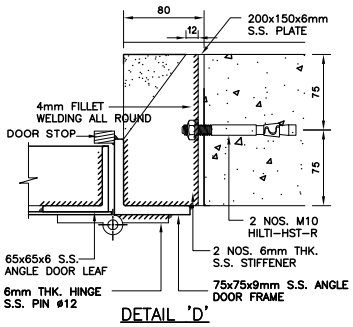

DETAIL 'D'

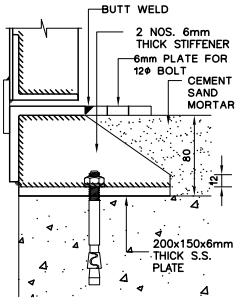

DETAIL 'E'

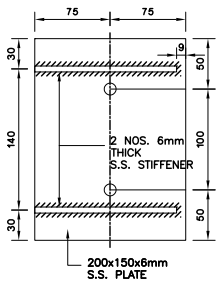

BASE PLATE OF S.S. STEEL BRACKET

TYPICAL STEEL BRACKET FIXING DETAIL

NOTE: SPACING OF STEEL BRACKET TO BE 450 c/c OR IN ACCORDING WITH THE STRUCTURAL DESIGN.

NOTES:

1. ALL CONNECTIONS FOR STAINLESS STEEL WORKS SHALL BE 3mm S.S. FILLET WELD ALL ROUND, EXCEPT 3mm INTERMITTENT FILLET WELD 30@300 C/C FOR FIXING OF 3mm THICK STAINLESS STEEL PLATE.
2. ALL STEEL WORKS TO BE GRADE 316L STAINLESS STEEL OR EQUIVALENT.
3. ALL STEEL WORKS MUST BE BONDED TO THE EARTHING TERMINAL AT THE DISTRIBUTION BOARD WITH COPPER CONDUCTOR NOT LESS THAN 6mm².
4. ALL DIMENSIONS ARE IN mm.
5. ALL DIMENSIONS, CONSTRUCTION DETAILS AND MEMBER SIZES SHOWN ARE INDICATIVE ONLY. THE DEVELOPER/CONTRACTOR IS RESPONSIBLE TO DESIGN FIRE RATED DOOR WITH DUE CONSIDERATION OF THE STRUCTURAL AND FIRE PERFORMANCE REQUIREMENTS UNDER RELATED REGULATIONS AND ENSURE THAT THE REQUIRED FIRE RESISTANCE RATING CAN BE ACHIEVED WITH FIRE CERTIFICATE AVAILABLE FOR CLPP APPROVAL.
6. THE DEVELOPER/CONTRACTOR IS REPONSIBLE TO CHECK WITH A STRUCTURAL SUBMISSION FOR THE STEEL DOOR AND BRACKETS. PARTICULARLY TO CATER FOR THE DESIGN WIND PRESSURE TO MATCH THE BUILDING HEIGHT. THE DESIGN WIND LOAD SHALL COMPLY WITH CLAUSE 6 OF CODE OF PRACTICE ON WIND EFFECTS HONG KONG 2004.

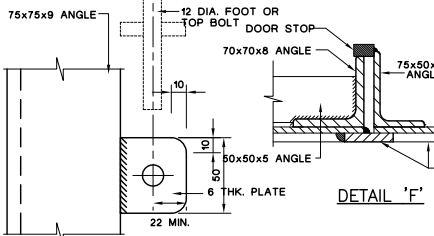

DETAIL FOR 12ø TOP & BOTTOM BOLT

DETAIL 'F'

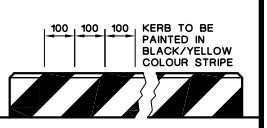

VIEW 'G'

D	GENERALLY REVISED
C	AMENDMENT OF DESCRIPTION TO VIEW 'C'
E	DIMENSION ADDED

REVS.	13-9-04	10-8-09	18-03-14	01-06-17	25-06-19						
	A	B	C	D	E	F	G	H	J	K	L
INITIAL	K.C.C.	K.C.C.	H.T.YU	M.S.FONG	H.T.YU						

CLP 中電

DRAWN:	FONG, MING SUM	DATE:	01-03-2016
CHECKED:	FONG, MING SUM	APPROVED:	GARY KWOK
SCALE:	N. T. S.	SHEET(S) IN SET:	

TITLE :

TYPICAL DETAILS OF DOUBLE LEAF STAINLESS STEEL DOOR WITH WICKET ON THE LEFT AND WITHOUT LOCK

ASSET MANAGEMENT

DRG. NO. T COP 10250 D E33 0103 19 E A

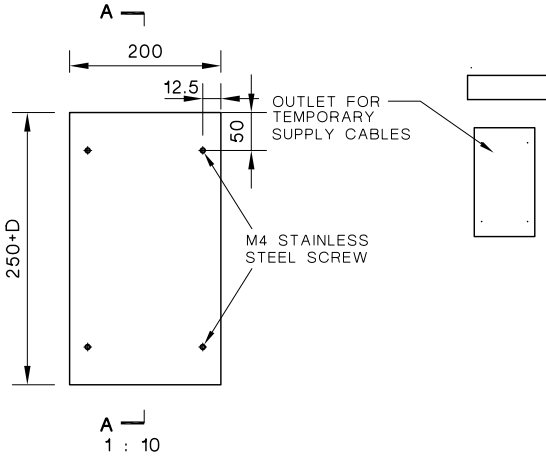

FRONT VIEW OF STAINLESS STEEL COVER

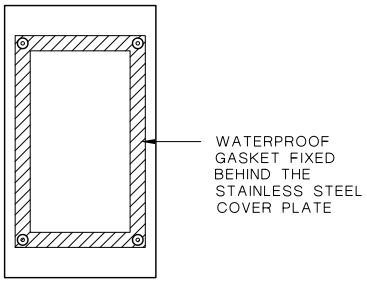

1 : 10

BACK VIEW OF STAINLESS STEEL COVER

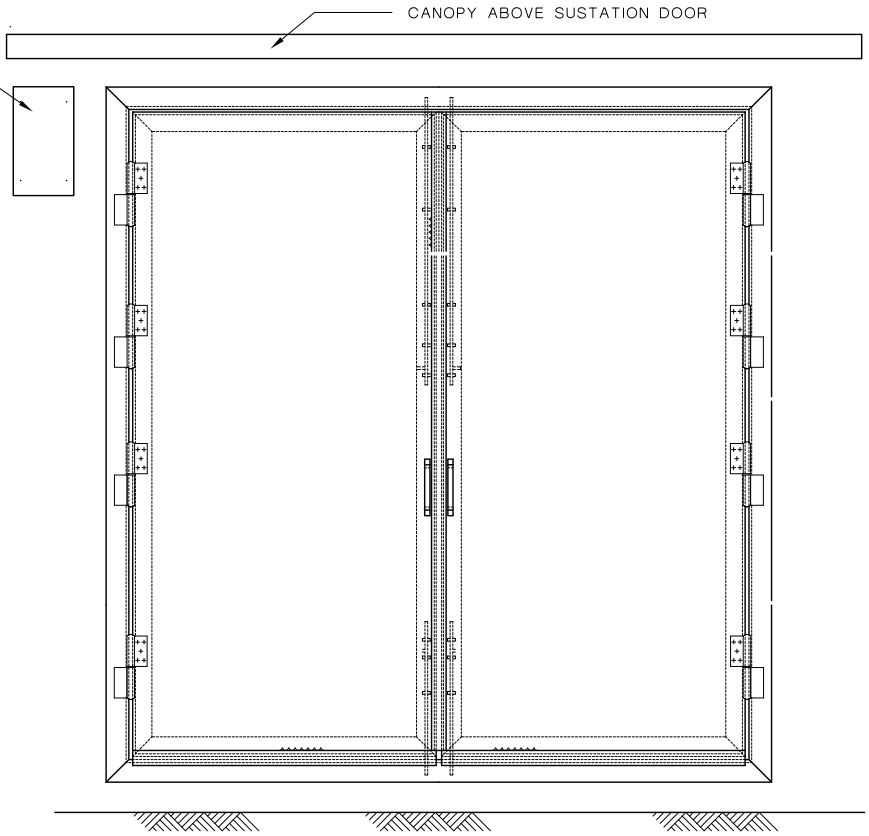

ELEVATION

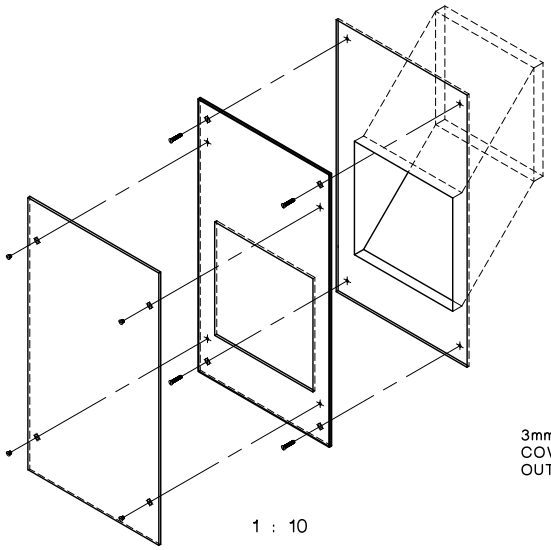

1 : 10

ISOMATIC VIEW FOR OUTLET FIXING

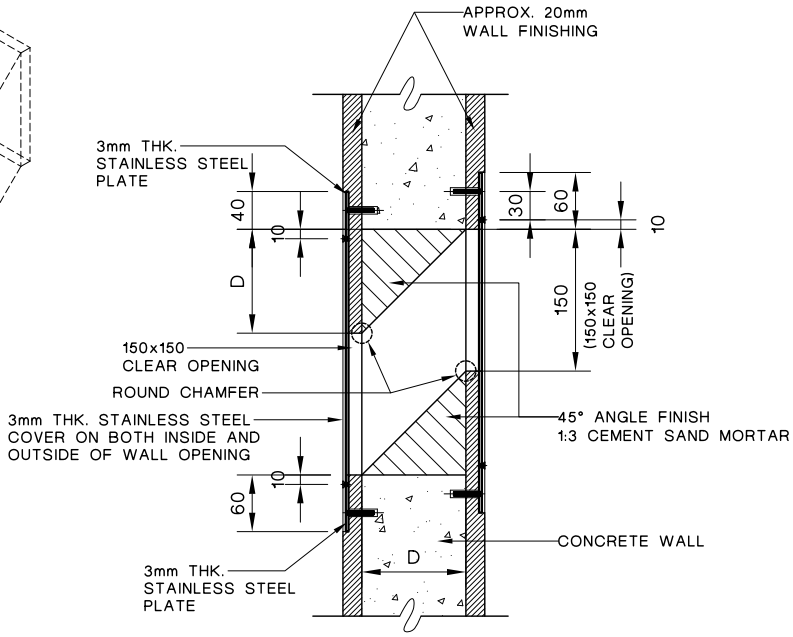

1 : 8

SECTION A - A

NOTES:

1. HAIRLINE STAINLESS STEEL SHALL BE USED FOR THE COVER AND FRAME, IN CASE THE OUTLET IS LOCATED INSIDE THE INDEPENDENT STAIRCASE, FIRE RATED PROMAT BOARD SHALL BE USED FOR THE COVER.
2. STAINLESS STEEL FIXING SCREW SHALL BE USED
3. ALL DIMENSIONS ARE IN mm

B	OUTLET OF TEMPORARY SUPPLY CABLES UPDATED	A	NOTES 1 UPDATED

CLP 中電

REVS.	17.03.17	22.08.19									
	A	B	C	D	E	F	G	H	J	K	L
INITIAL	H.T.YU	H.T.YU									

DRAWN:	T. W. LAU	DATE:	14-09-2007
CHECKED:	K. C. CHENG	APPROVED:	W. C. HO
SCALE:	N.T.S.	SHEET(S) IN SET:	

TITLE :

DETAILS OF OUTLET FOR TEMPORARY SUPPLY CABLES

ASSET MANAGEMENT

DRG. NO. T C O P 1 0 2 5 0 D E 3 3 0 1 0 3 2 9 B A

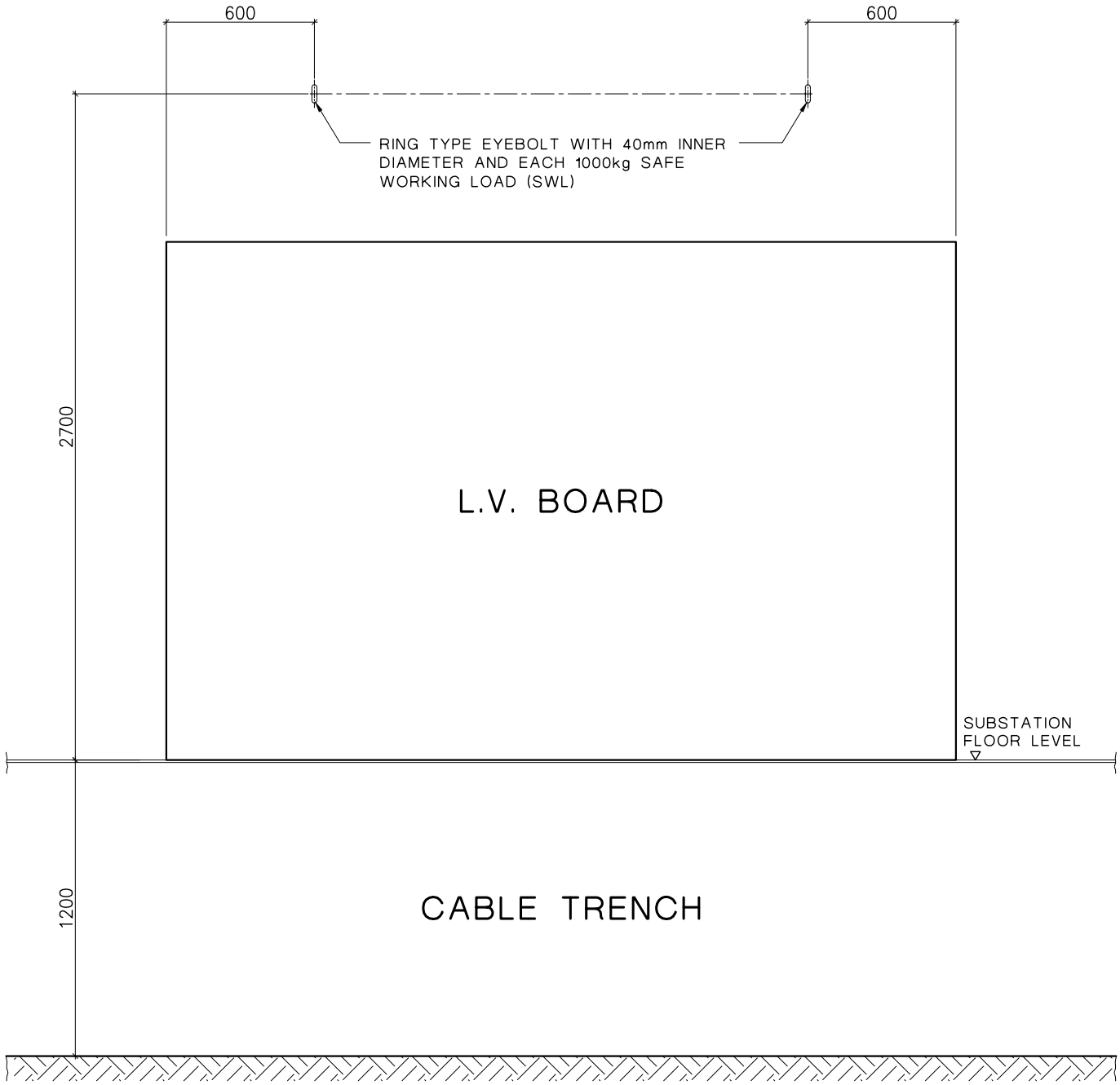

NOTES FOR EYEBOLT :-

1. ALL STRUCTURAL STEEL SHALL BE WELDABLE STRUCTURAL STEEL OF GRADE S275 CLASS 1 IN ACCORDANCE WITH BS EN 10025:2004.
2. ALL STRUCTURAL STEEL WORK INCLUDING STEEL SHALL BE HOT DIP GALVANIZED TO 85μm IN ACCORDANCE WITH BS EN ISO 1461:2009.
3. ALL WELDINGS SHALL BE 6mm FILLET WELD CONTINUOUSLY, UNLESS OTHERWISE STATED.
4. ALL DIMENSIONS ARE IN mm.

CLP 中電

DRAWN:	C. W. WONG	DATE:	20 AUG., 2019
CHECKED:	EDMOND YU	APPROVED:	W. C. HO
SCALE:	N. T. S.	SHEET(S) IN SET:	1

ASSET MANAGEMENT

REVS.	A	B	C	D	E	F	G	H	J	K	L
INITIAL											

TITLE :

TYPICAL DETAILS OF EYEBOLT INSTALLATION FOR L.V. BOARD

DRG. NO. T COP 1 0 2 5 0 D E 3 3 0 1 0 3 4 0 - A

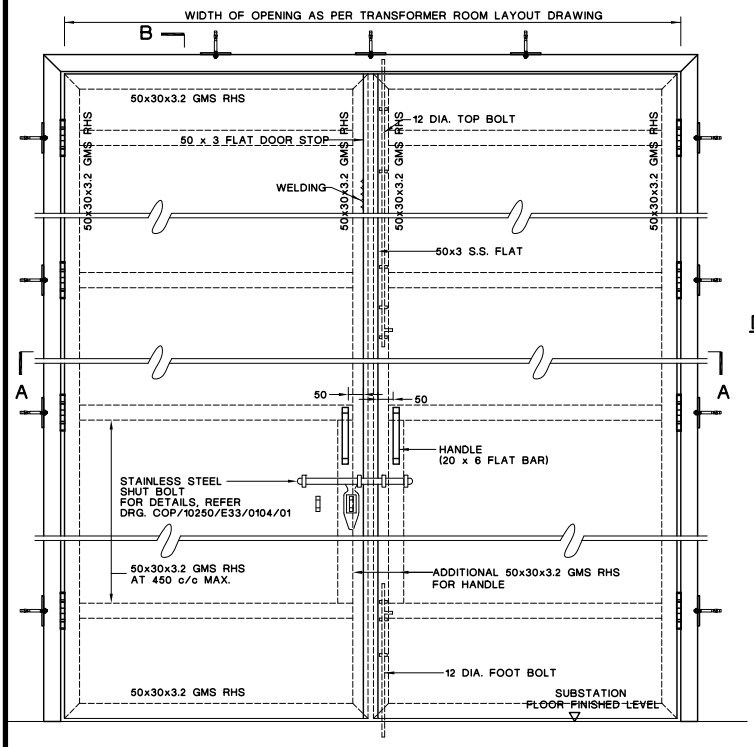

ELEVATION

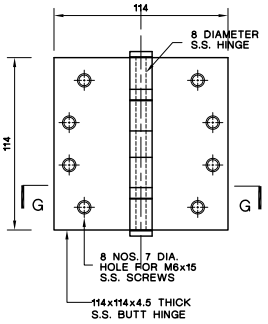

DETAIL OF S.S. BUTT HINGE

SCALE: 1 : 20

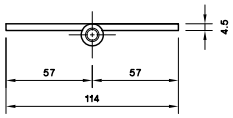

SECTION G-G

SCALE: 1 : 20

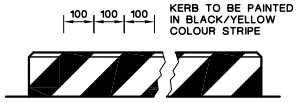

VIEW C

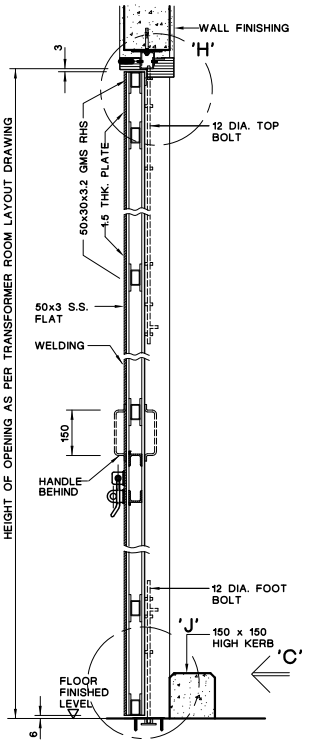

SECTION B-B

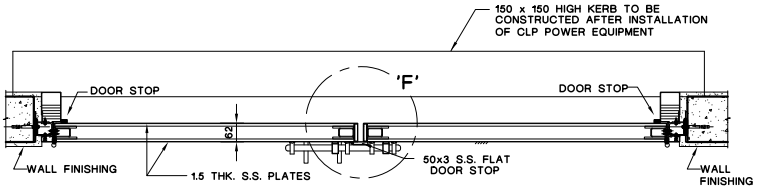

SECTION A-A

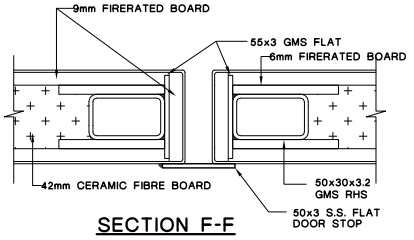

SECTION F-F

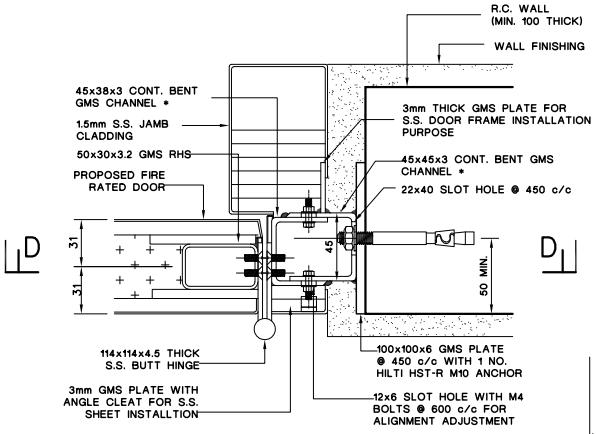

DOOR JAMB/FRAME FIXING DETAIL

NOTES: 1. * DENOTES SIZE OF STEEL CHANNEL TO SUIT THE EXACT DIMENSION OF S.S. BUTT HINGE SCREW POSITION.
2. S.S. JAMB CLADDING SUPPORTING DETAIL SHALL BE DESIGNED BY THE CONTRACTOR.

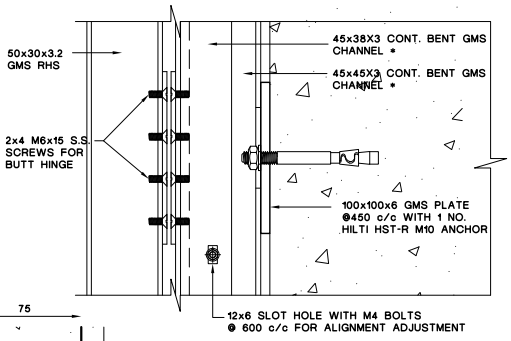

SECTION D-D

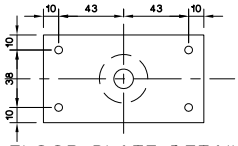

FLOOR PLATE DETAIL
FOR FOOT BOLT

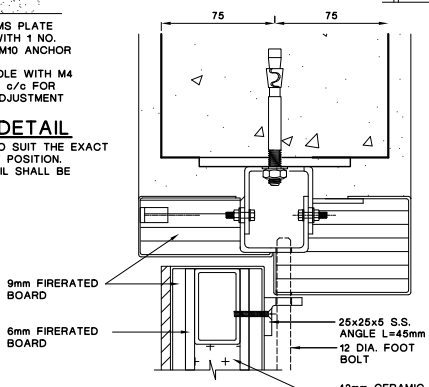

DETAIL H

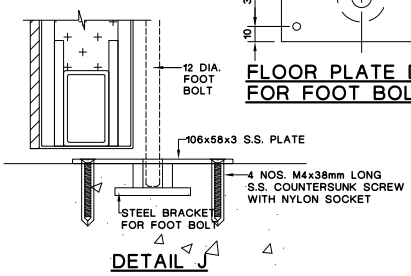

DETAIL J

NOTES:

1. ALL CONNECTIONS FOR STAINLESS AND G.M.S. STEEL WORKS SHALL BE 3mm S.S. FILLET WELD, OR 3mm FILLET WELDED FOR G.M.S. ALL ROUND.
2. ALL STEEL WORKS TO BE GRADE 316L STAINLESS STEEL OR EQUIVALENT.
3. ALL STEEL WORKS MUST BE BONDED TO THE EARTHING TERMINAL AT THE DISTRIBUTION BOARD WITH COPPER CONDUCTOR NOT LESS THAN $6mm^2$.
4. ALL DIMENSIONS ARE IN mm.
5. ALL DIMENSIONS, CONSTRUCTION DETAILS AND MEMBER SIZES SHOWN ARE INDICATIVE ONLY, THE DEVELOPER/CONTRACTOR IS RESPONSIBLE TO DESIGN FIRE RATED DOOR WITH DUE CONSIDERATION OF THE STRUCTURAL AND FIRE PERFORMANCE REQUIREMENTS UNDER RELATED REGULATIONS AND ENSURE THAT THE REQUIRED FIRE RESISTANCE RATING CAN BE ACHIEVED WITH FIRE CERTIFICATE AVAILABLE FOR CLPP APPROVAL.

REVS.	A	B	C	D	E	F	G	H	J	K	L
INITIAL											

TITLE :

FOR FIRE RATED DOOR WITH INSULATION
TYPICAL DETAILS OF DOUBLE LEAF
LAMINATED STEEL DOOR WITH SHUT BOLT

DRAWN:	M. S. FONG	DATE:	01-03-2016
CHECKED:	M. S. FONG	APPROVED:	GARY KWOK
SCALE:	N.T.S.	SHEET(S) IN SET:	

ASSET MANAGEMENT

DRG. NO. T COP 10250 D E33 0103 41 - A

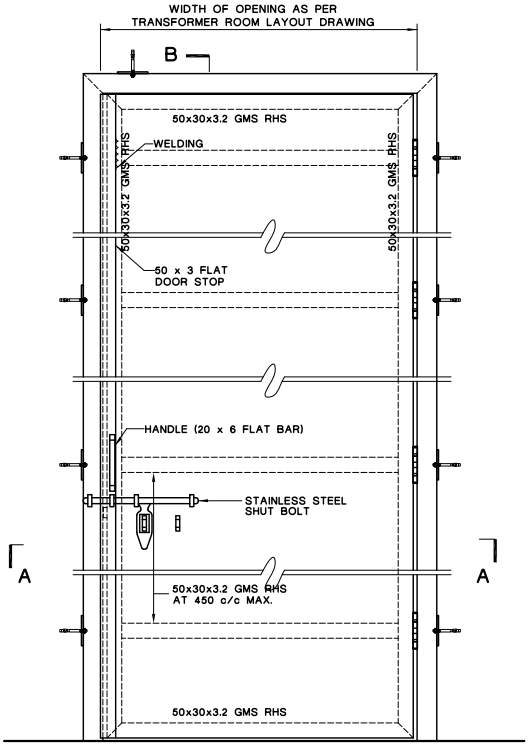

ELEVATION

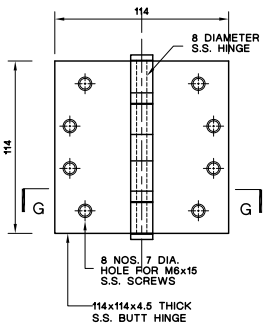

DETAIL OF S.S. BUTT HINGE

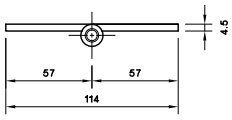

SECTION G-G

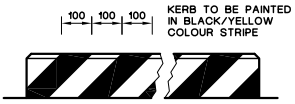

VIEW C

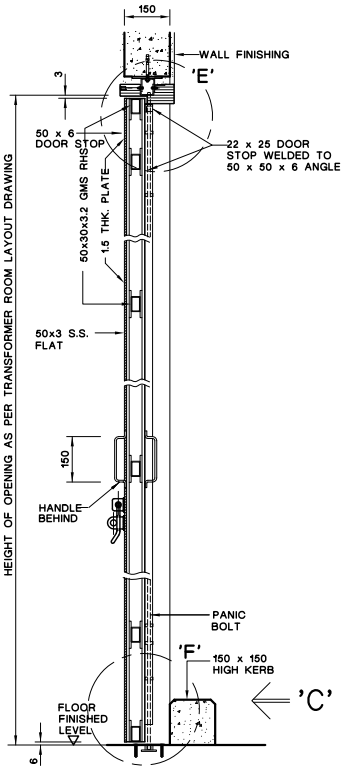

SECTION B-B

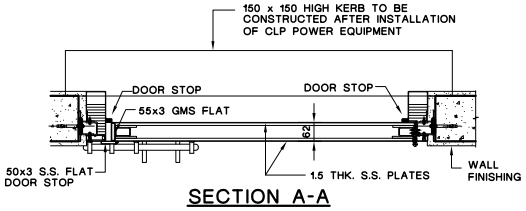

SECTION A-A

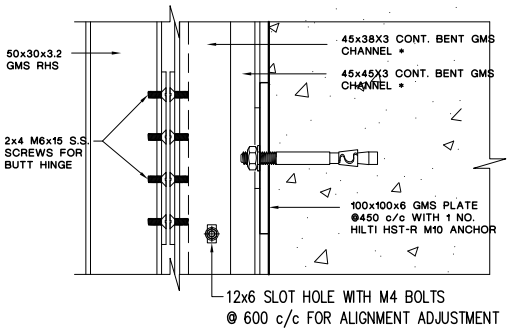

SECTION D-D

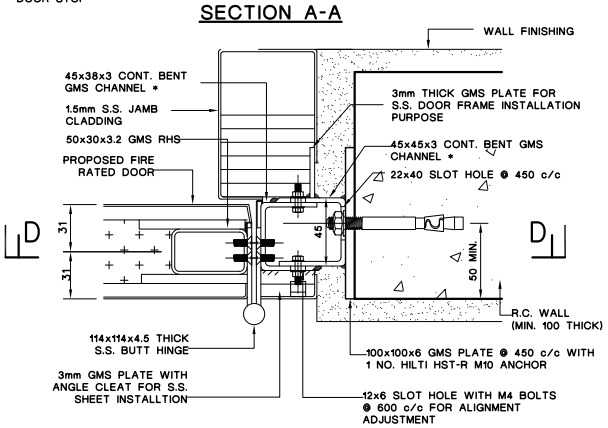

DOOR JAMB/FRAME FIXING DETAIL

NOTES: 1. * DENOTES SIZE OF STEEL CHANNEL TO SUIT THE EXACT DIMENSION OF S.S. BUTT HINGE SCREW POSITION.
2. S.S. JAMB CLADDING SUPPORTING DETAIL SHALL BE DESIGNED BY THE CONTRACTOR.

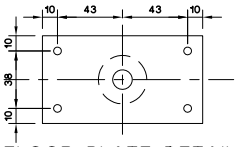

FLOOR PLATE DETAIL FOR FOOT BOLT

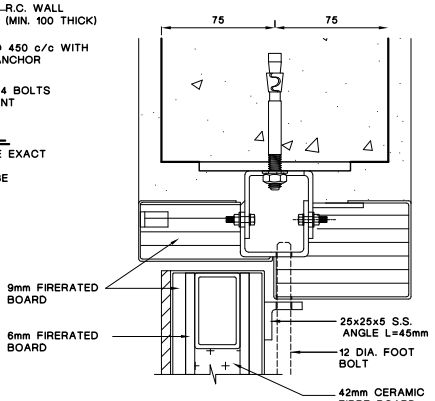

DETAIL E

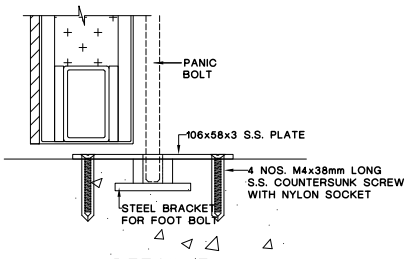

DETAIL F

NOTES:

1. ALL CONNECTIONS FOR STAINLESS AND G.M.S. STEEL WORKS SHALL BE 3mm S.S. FILLET WELD, OR 3mm FILLET WELDED FOR G.M.S. ALL ROUND.
2. ALL STEEL WORKS TO BE GRADE 316L STAINLESS STEEL OR EQUIVALENT.
3. ALL STEEL WORKS MUST BE BONDED TO THE EARTHING TERMINAL AT THE DISTRIBUTION BOARD WITH COPPER CONDUCTOR NOT LESS THAN 6mm^2.
4. ALL DIMENSIONS ARE IN mm.
5. ALL DIMENSIONS, CONSTRUCTION DETAILS AND MEMBER SIZES SHOWN ARE INDICATIVE ONLY, THE DEVELOPER/CONTRACTOR IS RESPONSIBLE TO DESIGN FIRE RATED DOOR WITH DUE CONSIDERATION OF THE STRUCTURAL AND FIRE PERFORMANCE REQUIREMENTS UNDER RELATED REGULATIONS AND ENSURE THAT THE REQUIRED FIRE RESISTANCE RATING CAN BE ACHIEVED WITH FIRE CERTIFICATE AVAILABLE FOR CLPP APPROVAL.

REVS.	A	B	C	D	E	F	G	H	J	K	L
INITIAL											

TITLE :

FOR FIRE RATED DOOR WITH INSULATION
TYPICAL DETAILS OF SINGLE LEAF LAMINATED STEEL DOOR WITH SHUT BOLT

DRAWN:	LAU, TZE WAH	DATE:	11-09-2019
CHECKED:	EDMOND YU	APPROVED:	W.C.HO
SCALE:	AS SHOWN	SHEET(S) IN SET:	

ASSET MANAGEMENT

DRG. NO. T COP 10250 DE 3 0103 42 - A

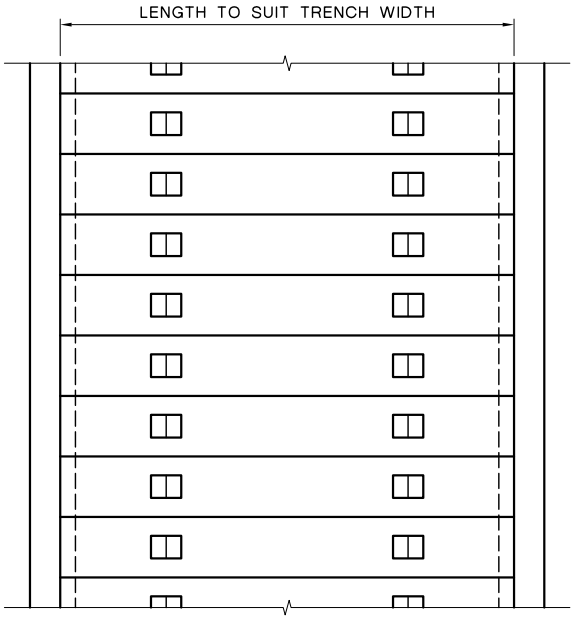

TYPICAL ARRANGEMENT OF
REINFORCED CONCRETE COVER

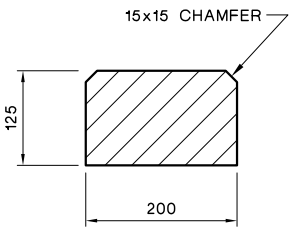

SECTION A-A

SCALE 1:10

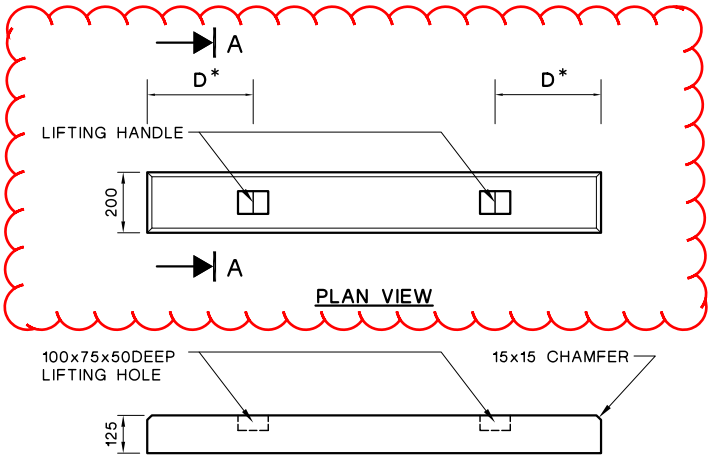

ELEVATION

TYPICAL DETAILS OF
REINFORCED CONCRETE COVER

NOTES:

1. THE MAX. WEIGHT OF THE CONCRETE COVER SHALL NOT EXCEED 75kg FOR EASY HANDLING.
2. THE COVERS SHALL BE DESIGNED BY THE BUILDING OWNER TO WITHSTAND THE REQUIRED LOADING OF THE SITE. (MIN. LOADING SHALL BE NOT LESS THAN 7.5kPa)
3. ALL DIMENSIONS ARE IN mm.

* THE CLEARANCE OF DISTANCE 'D' SHOULD NOT BE MORE THAN 250.

C	NOTE ADDED	B	GENERAL AMENDMENT	A	NOTES ADDED

REVS.	20.08.07	23.02.17	25.06.19								
	A	B	C	D	E	F	G	H	J	K	L
INITIAL	K.C.C.	H.T.YU	H.T.YU								

CLP 中電

DRAWN:	T. Y. IP	DATE:	8-8-2002
CHECKED:	K. C. CHENG	APPROVED:	K. W. WONG
SCALE:	1 : 25 (mm)	SHEET(S) IN SET:	

TITLE :

TYPICAL DETAILS OF R. C. COVER

ASSET MANAGEMENT

DRG. NO. T C O P 1 0 2 5 0 D E 3 3 0 1 0 4 0 4 C A

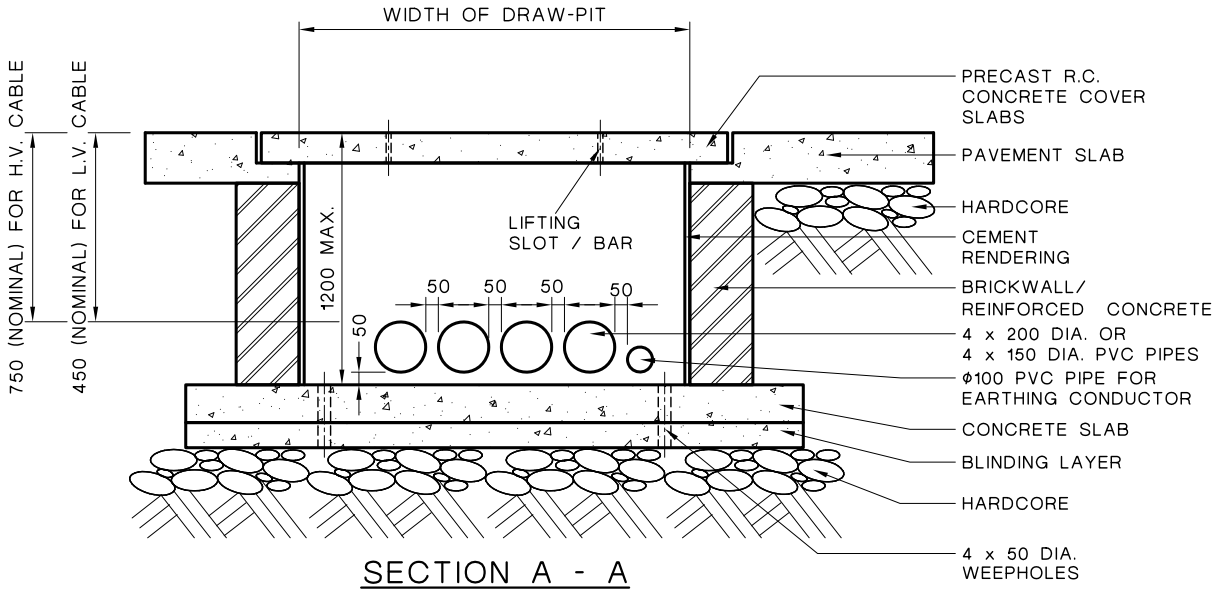

SECTION A - A

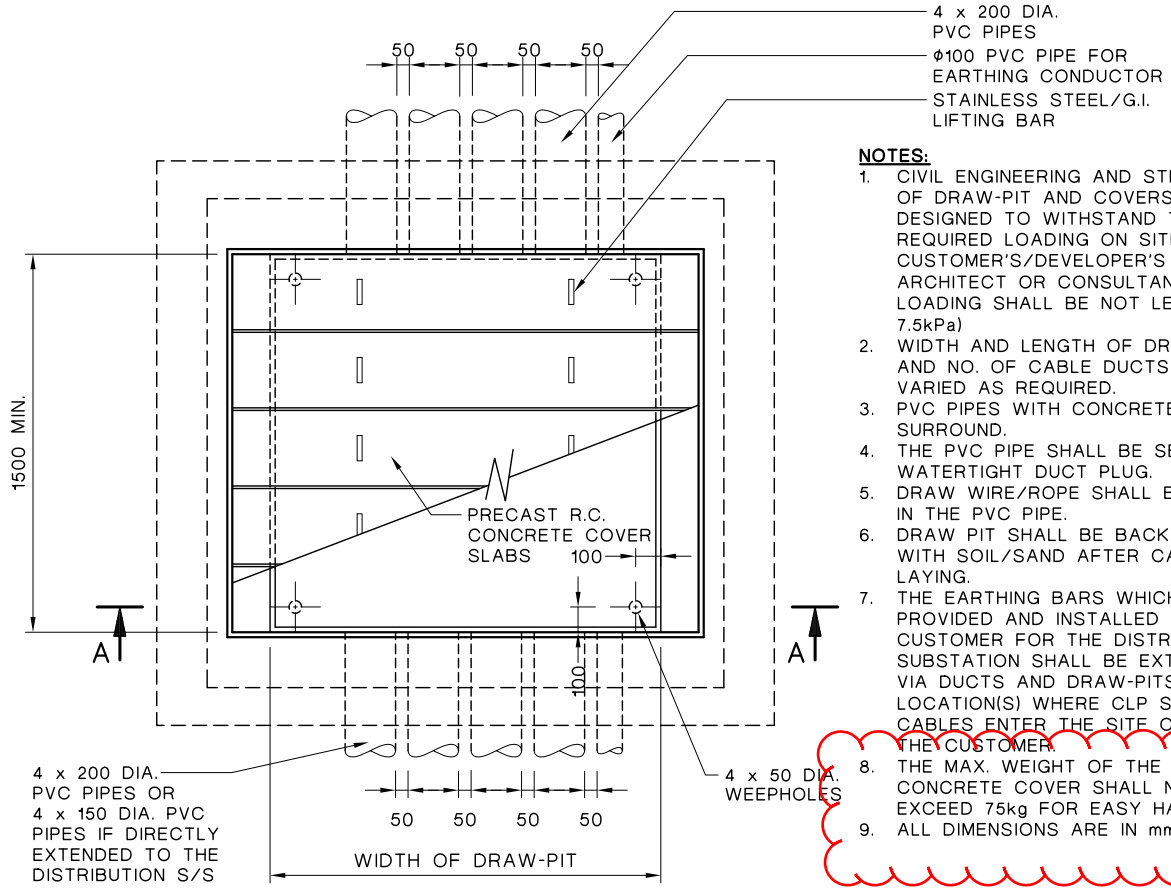

PLAN

NOTES:

1. CIVIL ENGINEERING AND STRUCTURE OF DRAW-PIT AND COVERS TO BE DESIGNED TO WITHSTAND THE REQUIRED LOADING ON SITE BY CUSTOMER'S/DEVELOPER'S ARCHITECT OR CONSULTANT. (MIN. LOADING SHALL BE NOT LESS THAN 7.5kPa)
2. WIDTH AND LENGTH OF DRAW-PIT AND NO. OF CABLE DUCTS TO BE VARIED AS REQUIRED.
3. PVC PIPES WITH CONCRETE SURROUND.
4. THE PVC PIPE SHALL BE SEALED BY WATERTIGHT DUCT PLUG.
5. DRAW WIRE/ROPE SHALL BE LAID IN THE PVC PIPE.
6. DRAW PIT SHALL BE BACKFILLED WITH SOIL/SAND AFTER CABLE LAYING.
7. THE EARTHING BARS WHICH ARE PROVIDED AND INSTALLED BY THE CUSTOMER FOR THE DISTRIBUTION SUBSTATION SHALL BE EXTENDED VIA DUCTS AND DRAW-PITS TO THE LOCATION(S) WHERE CLP SUPPLY CABLES ENTER THE SITE OWNED BY THE CUSTOMER.
8. THE MAX. WEIGHT OF THE CONCRETE COVER SHALL NOT EXCEED 75kg FOR EASY HANDLING.
9. ALL DIMENSIONS ARE IN mm.

E	NOTES ADDED
D	PVC PIPE SIZE UPDATED, G.I. PIPE DELETED.

REVS.	20.08.07	21.10.08	26.03.12	18.03.14	20.09.19						
	A	B	C	D	E	F	G	H	J	K	L
INITIAL	K.C.C.	K.C.C.	K.C.C.	H.T.YU	H.T.YU						

CLP 中電

DRAWN:	C. W. WONG	DATE:	17 Sep., 2002
CHECKED:	K. C. CHENG	APPROVED:	K. W. WONG
SCALE:	N. T. S.	SHEET(S) IN SET:	1

TITLE :

TYPICAL DETAILS OF CABLE DRAW-PIT (STRAIGHT APPLICATION)

A S S E T M A N A G E M E N T

DRG. NO. T C O P 1 0 2 5 0 D E 3 3 0 1 0 4 0 5 E A

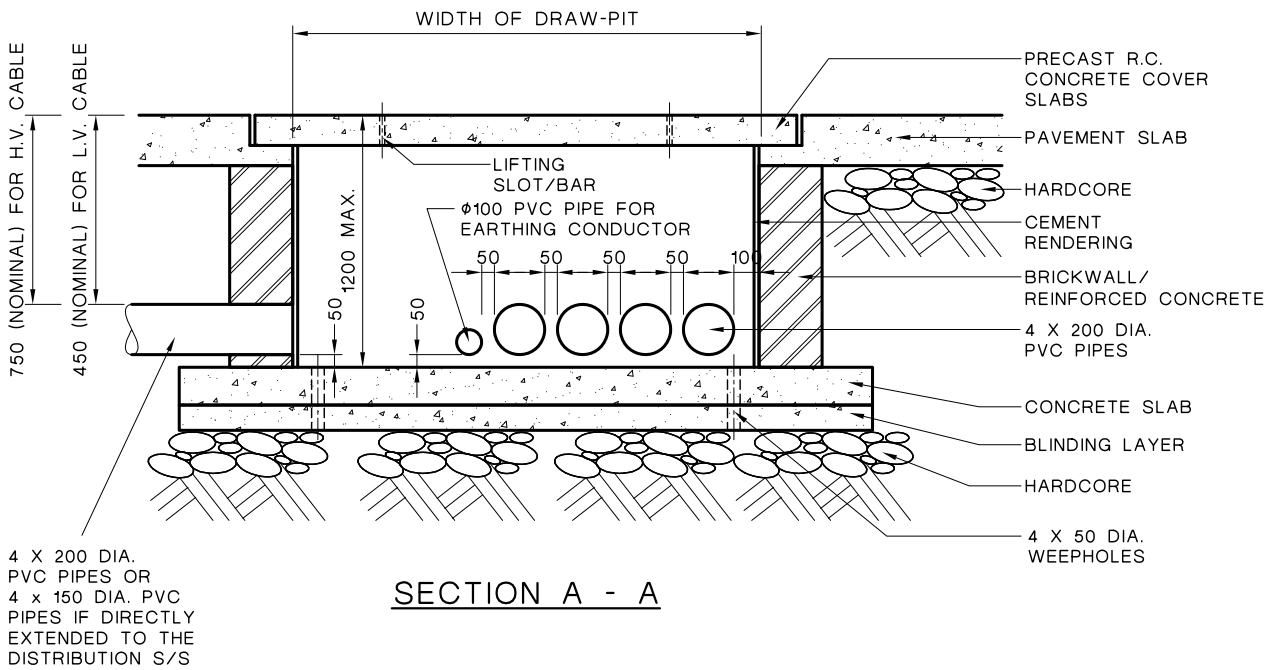

SECTION A - A

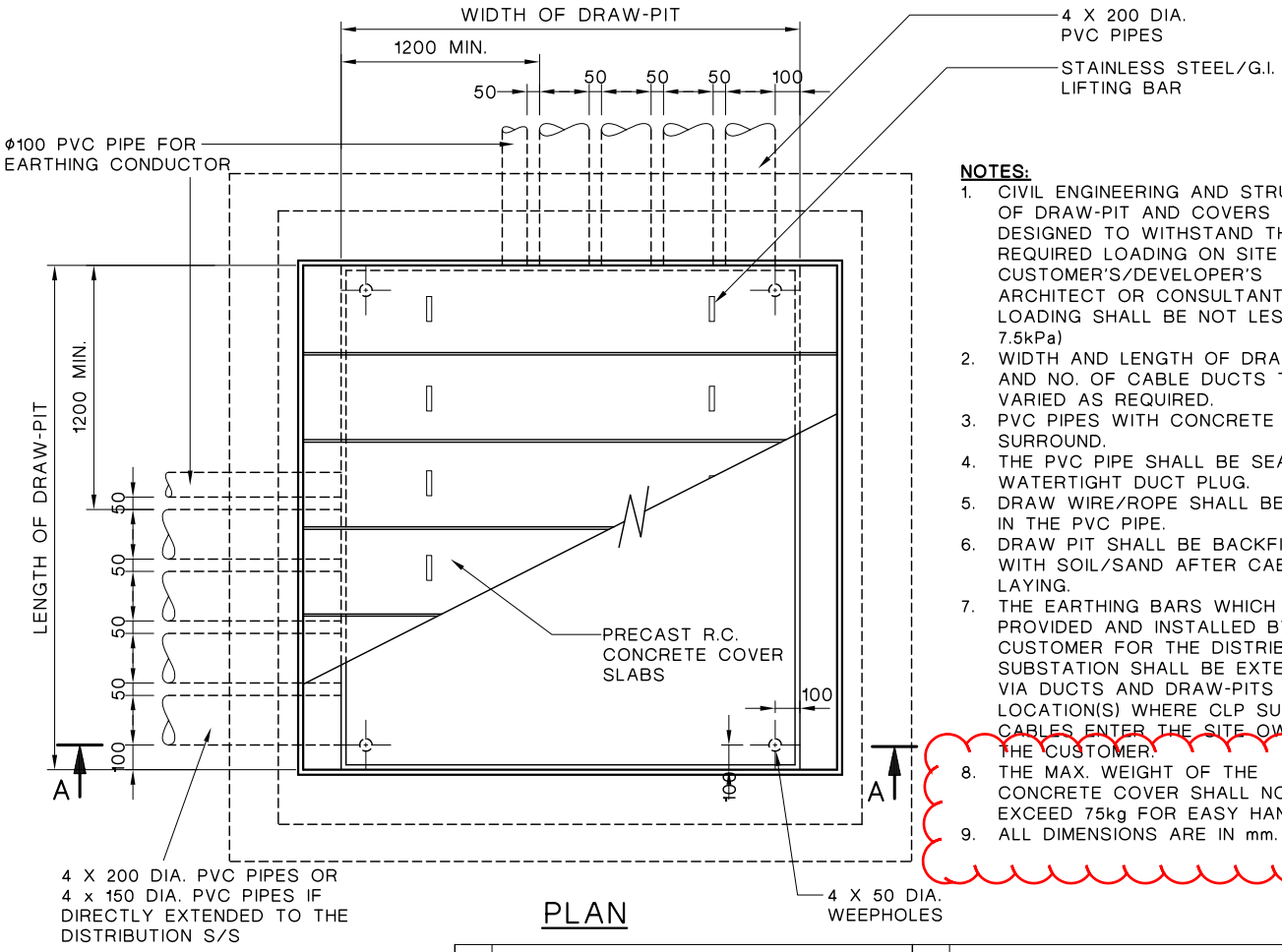

PLAN

NOTES:

1. CIVIL ENGINEERING AND STRUCTURE OF DRAW-PIT AND COVERS TO BE DESIGNED TO WITHSTAND THE REQUIRED LOADING ON SITE BY CUSTOMER'S/DEVELOPER'S ARCHITECT OR CONSULTANT. (MIN. LOADING SHALL BE NOT LESS THAN 7.5kPa)
2. WIDTH AND LENGTH OF DRAW-PIT AND NO. OF CABLE DUCTS TO BE VARIED AS REQUIRED.
3. PVC PIPES WITH CONCRETE SURROUND.
4. THE PVC PIPE SHALL BE SEALED BY WATERTIGHT DUCT PLUG.
5. DRAW WIRE/ROPE SHALL BE LAID IN THE PVC PIPE.
6. DRAW PIT SHALL BE BACKFILLED WITH SOIL/SAND AFTER CABLE LAYING.
7. THE EARTHING BARS WHICH ARE PROVIDED AND INSTALLED BY THE CUSTOMER FOR THE DISTRIBUTION SUBSTATION SHALL BE EXTENDED VIA DUCTS AND DRAW-PITS TO THE LOCATION(S) WHERE CLP SUPPLY CABLES ENTER THE SITE OWNED BY THE CUSTOMER.
8. THE MAX. WEIGHT OF THE CONCRETE COVER SHALL NOT EXCEED 75kg FOR EASY HANDLING.
9. ALL DIMENSIONS ARE IN mm.

E	G.I. PIPE DELETED.	F	NOTES ADDED

REVS.	20.08.07	21.10.08	26.03.12	18.03.14	27.06.17	20.09.19					
	A	B	C	D	E	F	G	H	J	K	L
INITIAL	K.C.C.	K.C.C.	K.C.C.	H.T.YU	H.T.YU	H.T.YU					

CLP 中電

DRAWN:	C. W. WONG	DATE:	16 Sep., 2002
CHECKED:	K. C. CHENG	APPROVED:	K. W. WONG
SCALE:	N. T. S.	SHEET(S) IN SET:	

TITLE :

TYPICAL DETAILS OF CABLE DRAW-PIT (ANGLE APPLICATION)

A S S E T M A N A G E M E N T

DRG. NO. T COP 10250 DE3 0104 06 F A

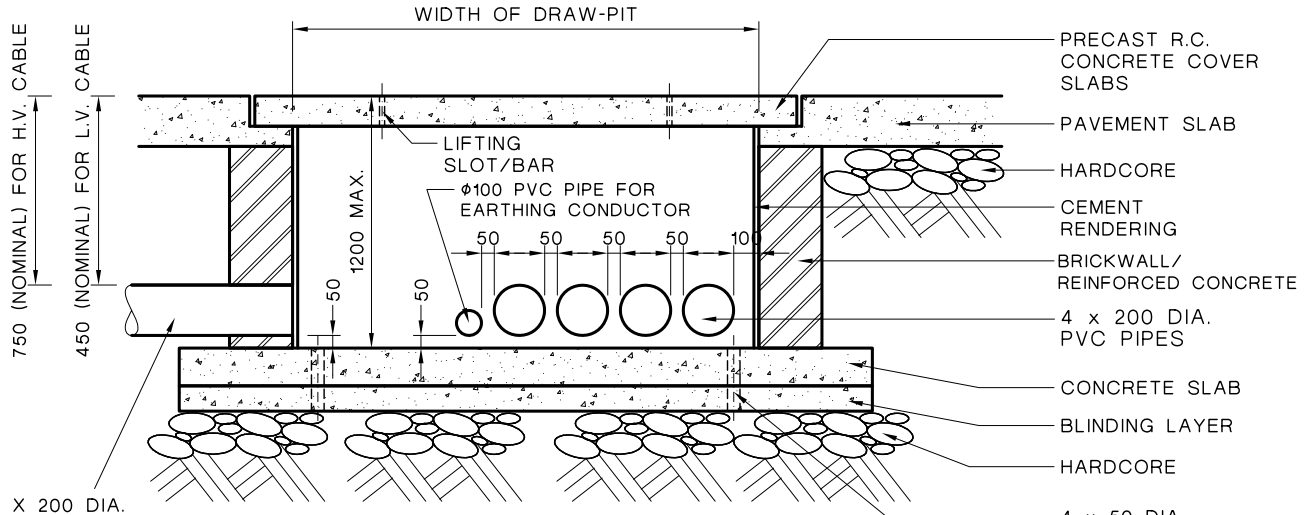

SECTION A - A

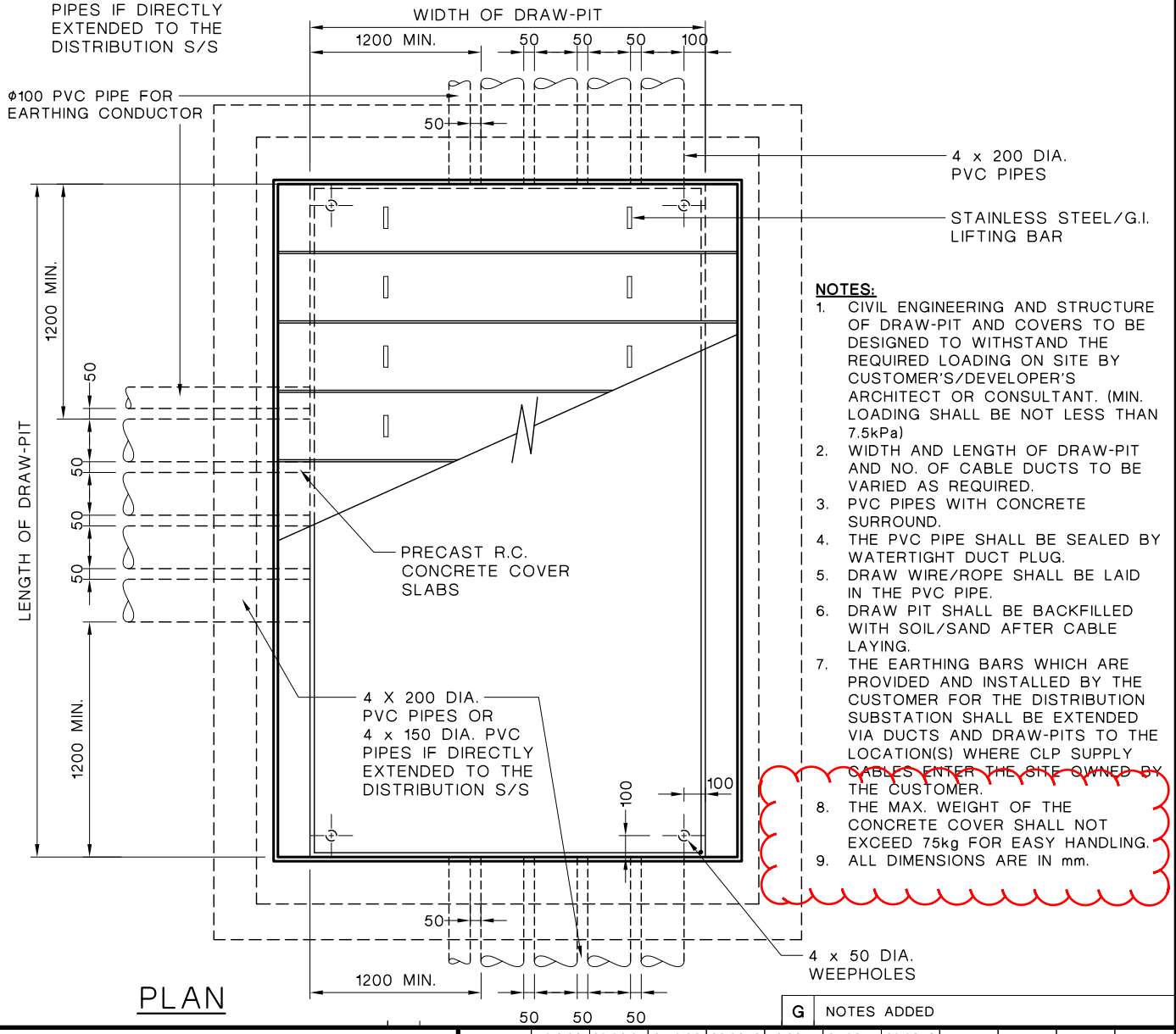

PLAN

NOTES:

1. CIVIL ENGINEERING AND STRUCTURE OF DRAW-PIT AND COVERS TO BE DESIGNED TO WITHSTAND THE REQUIRED LOADING ON SITE BY CUSTOMER'S/DEVELOPER'S ARCHITECT OR CONSULTANT. (MIN. LOADING SHALL BE NOT LESS THAN 7.5kPa)
2. WIDTH AND LENGTH OF DRAW-PIT AND NO. OF CABLE DUCTS TO BE VARIED AS REQUIRED.
3. PVC PIPES WITH CONCRETE SURROUND.
4. THE PVC PIPE SHALL BE SEALED BY WATERTIGHT DUCT PLUG.
5. DRAW WIRE/ROPE SHALL BE LAID IN THE PVC PIPE.
6. DRAW PIT SHALL BE BACKFILLED WITH SOIL/SAND AFTER CABLE LAYING.
7. THE EARTHING BARS WHICH ARE PROVIDED AND INSTALLED BY THE CUSTOMER FOR THE DISTRIBUTION SUBSTATION SHALL BE EXTENDED VIA DUCTS AND DRAW-PITS TO THE LOCATION(S) WHERE CLP SUPPLY CABLES ENTER THE SITE OWNED BY THE CUSTOMER.
8. THE MAX. WEIGHT OF THE CONCRETE COVER SHALL NOT EXCEED 75kg FOR EASY HANDLING.
9. ALL DIMENSIONS ARE IN mm.

G	NOTES ADDED

REVS.	10.3.03	20.08.07	21.10.08	26.03.12	18.03.14	27.06.17	20.09.19				
	A	B	C	D	E	F	G	H	J	K	L
INITIAL	K.C.C.	K.C.C.	K.C.C.	K.C.C.	H.T.YU	H.T.YU	H.T.YU				

CLP 中電

DRAWN:	C. W. WONG	DATE:	17 Sep., 2002
CHECKED:	K. C. CHENG	APPROVED:	K. W. WONG
SCALE:	N. T. S.	SHEET(S) IN SET:	

TITLE :

TYPICAL DETAILS OF CABLE DRAW-PIT (TEE APPLICATION)

A S S E T M A N A G E M E N T

DRG. NO. T C O P 1 0 2 5 0 D E 3 3 0 1 0 4 0 7 G A

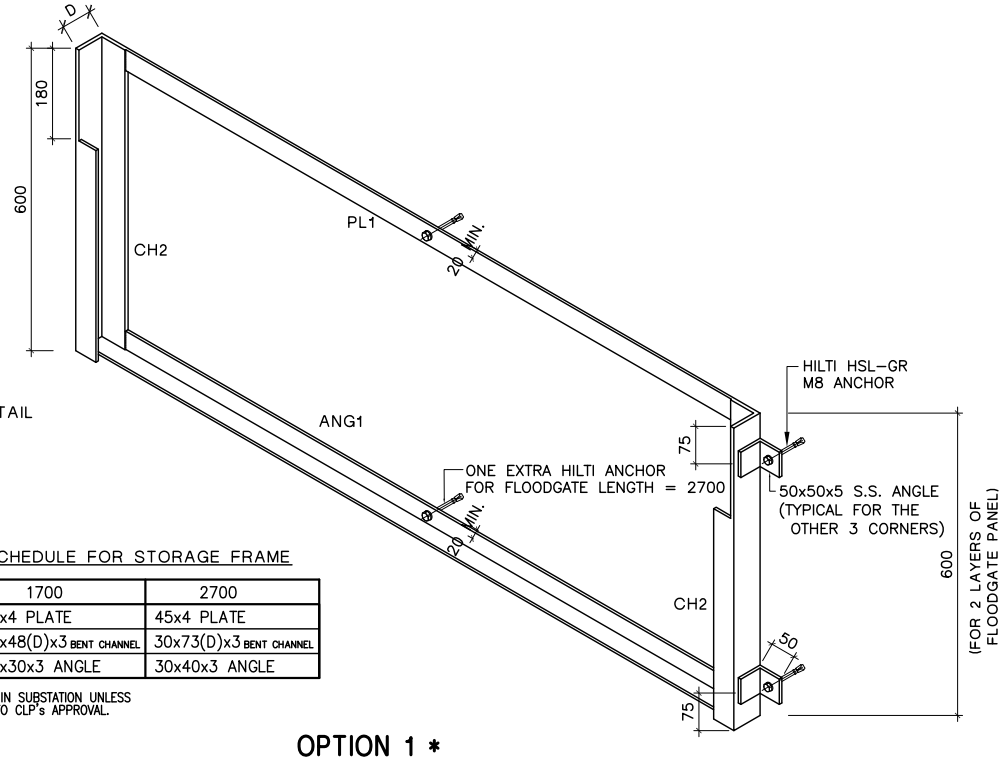

NOTE:

1. FOR GENERAL NOTES AND DETAIL OF S.S. FLOOD GATE, SEE DRAWING T-COP-10250-D-E33-0112-01.
2. D REFERS TO D OF CH2

STAINLESS STEEL MEMBER SIZE SCHEDULE FOR STORAGE FRAME

MEMBER MARK \ LENGTH (L)	1200	1700	2700
PL1	25x4 PLATE	30x4 PLATE	45x4 PLATE
CH2	30x38(D)x3 BENT CHANNEL	30x48(D)x3 BENT CHANNEL	30x73(D)x3 BENT CHANNEL
ANG1	30x30x3 ANGLE	30x30x3 ANGLE	30x40x3 ANGLE

NOTE: * OPTION 1 IS PREFERRED TO BE INSTALLED IN SUBSTATION UNLESS THERE IS SPACE LIMITATION AND SUBJECT TO CLP's APPROVAL.

OPTION 1 *

ISOMETRIC VIEW OF STORAGE FRAME FOR S.S. FLOODGATE IN HORIZONTAL ARRANGEMENT

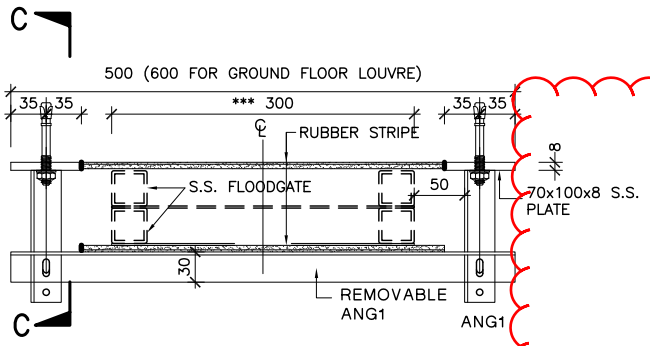

SECTION B - B (FOR OPTION 2)

NOTE: *** DENOTES 400 FOR S.S. FLOODGATE FOR GROUND FLOOR LOUVRE.

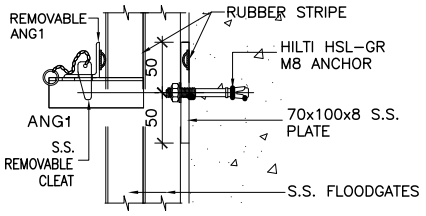

SECTION C - C (FOR OPTION 2)

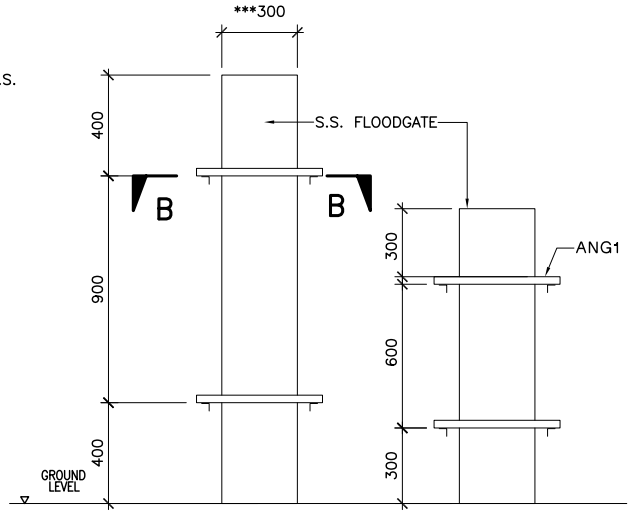

OPTION 2 **FRONT VIEW FOR STORAGE FRAME FOR S.S. FLOODGATE IN VERTICAL ARRANGEMENT (FOR 1200 AND 1700 FLOODGATE ONLY)

NOTE: *** DENOTES 400 FOR S.S. FLOODGATE FOR GROUND FLOOR LOUVRE.

A	VERTICAL STORAGE FRAME ARRANGEMENT FOR 2700 LENGTH FLOODGATE IS DELETED.

REVS.	25.06.19										
	A	B	C	D	E	F	G	H	J	K	L
INITIAL	H.T.YU										

CLP 中電

DRAWN:	M S FONG	DATE:	4 SEP., 2015
CHECKED:	M S FONG	APPROVED:	GARY KWOK
SCALE:	N. T. S.	SHEET(S) IN SET:	3

TITLE :

STAINLESS STEEL FLOODGATE
STORAGE FRAME INSTALLATION DETAILS

ASSET MANAGEMENT

DRG. NO. T C O P 1 0 2 5 0 D E 3 3 0 1 1 2 0 3 A A